| | |
|---|---|
| Brand | hansgrohe |
| Art. Name | **Talis M54** Single lever kitchen mixer 210, pull-out spray, 2jet |
| Art. Nr. | 72800673 |
| Surface | Matt Black |

reddot winner 2020

## Product picture



## Drawing

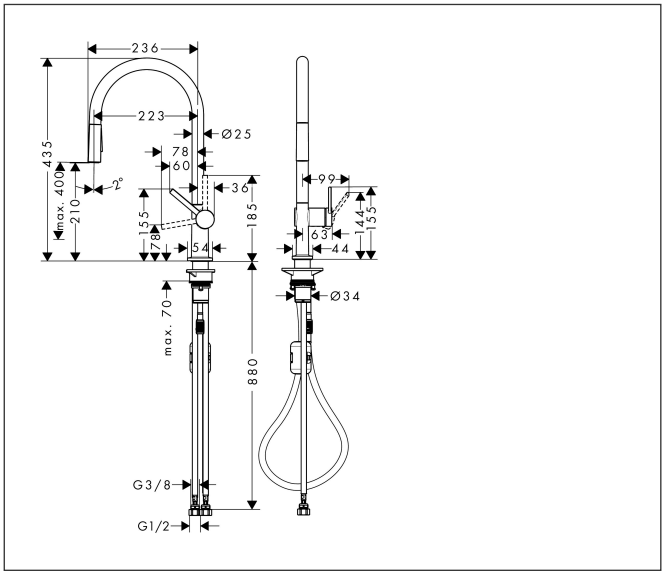


## Features

- ComfortZone: 210
- swivel range adjustable in 4 steps 60°, 110°, 150° or 360°
- LaminarSpray, ShowerSpray
- lockable shower spray, spray returns through pressing spray diverter and spray returns automatically through handle closing
- quick-connect hose
- connection dimension: DN15
- maximum flow rate at 3 bar: 6 l/min
- ceramic cartridge
- connection type: G ⅜ hose connections
- temperature limitation adjustable
- integrated non-return valve
- suitable for continuous flow water heaters
- extension length up to: 50 cm
- tap hole with Ø 35 mm required

## Technology

Pull-out | Comfort Zone | EcoSmart | Quick Clean

## Spray Types

Shower Spray | Laminar Spray

| | |
|---|---|
| Brand | hansgrohe |
| Art. Name | **Talis M54** Single lever kitchen mixer 210, pull-out spray, 2jet |
| Art. Nr. | 72800673 |
| Surface | Matt Black |

**Flow chart**

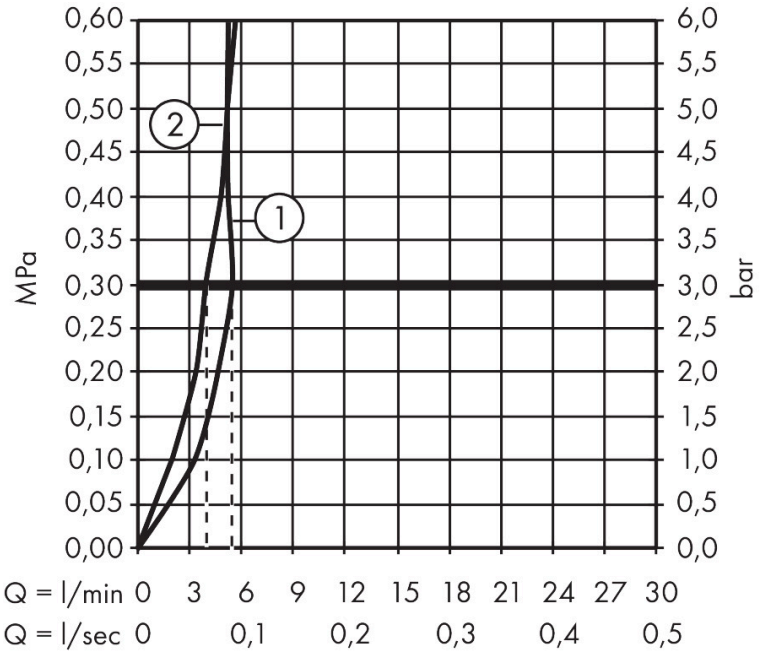


1 Shower spray
2 Normal spray

| | |
|---|---|
| Brand | hansgrohe |
| Art. Name | **Talis M54** Single lever kitchen mixer 210, pull-out spray, 2jet |
| Art. Nr. | 72800673 |
| Surface | Matt Black |

**Spare Parts Drawing for build year: > 04/20**

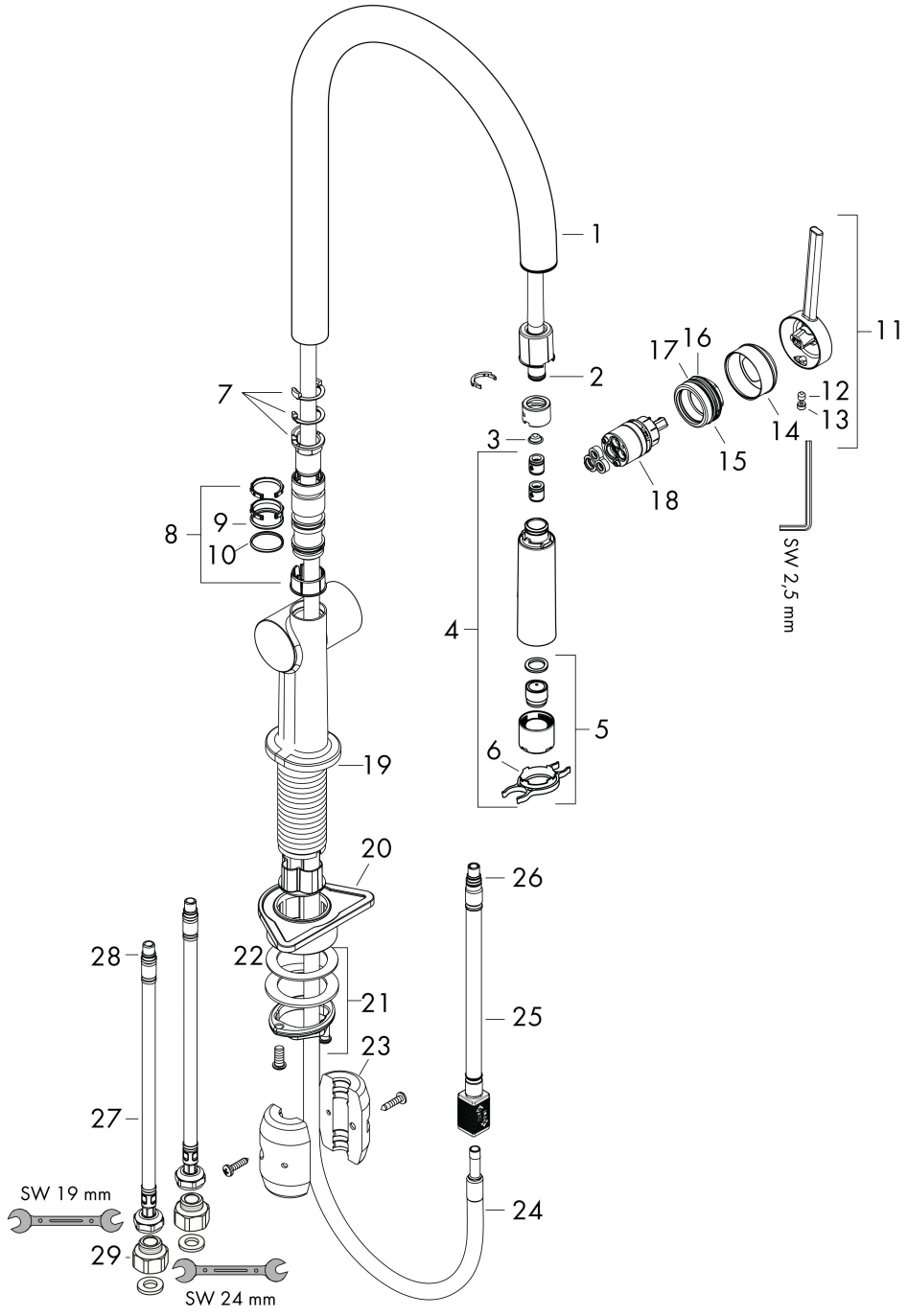

| | |
|---|---|
| Brand | hansgrohe |
| Art. Name | **Talis M54** Single lever kitchen mixer 210, pull-out spray, 2jet |
| Art. Nr. | 72800673 |
| Surface | Matt Black |

**Spare parts list for build year: > 04/20**

| Pos. | Description | Articlenumber |
|---|---|---|
| 1 | spout cpl. | 93739670 |
| 2 | O-ring 8x2 | 98112000 |
| 3 | filter | 98516000 |
| 4 | handspray | 93741673 |
| 5 | spray former | 93342003 |
| 6 | service tool | 95910000 |
| 7 | set of locating rings (60° / 110° / 150°) | 94911000 |
| 8 | set of lever collars | 98365000 |
| 9 | O-ring 19x2 | 98426000 |
| 10 | O-ring 20x1,5 | 98197000 |
| 11 | handle | 93736670 |
| 12 | hollow set screw M5x5 | 98446000 |
| 13 | screw cover | 93735610 |
| 14 | flange | 93737670 |
| 15 | nut | 93738000 |
| 16 | O-ring 30x1,5 | 98433000 |
| 17 | O-ring 29x2 | 98391000 |
| 18 | cartridge, assy | 93740000 |
| 19 | O-ring 36x3 | 98052000 |
| 20 | support | 97523000 |
| 21 | fixing set (Ø 34) | 95049000 |
| 22 | lever collar | 97548000 |
| 23 | weight | 92500000 |
| 24 | hose | 93745000 |
| 25 | hose | 93744000 |
| 26 | O-ring 7x1,5 | 98422000 |
| 27 | connection hose 900 mm M8x0,75 G3/8 | 93746000 |
| 28 | O-ring 6,6x1,6 | 93019000 |
| 29 | set of adapters | 93395000 |