Brand	hansgrohe
Art. Name	**Talis M54** Single lever kitchen mixer 210, pull-out spray, 2jet
Art. Nr.	72800003
Surface	Chrome

reddot winner 2020

Product picture



Drawing

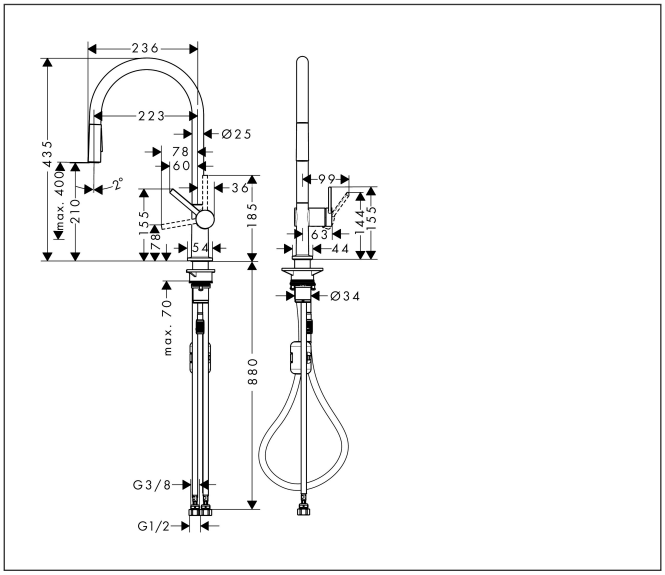

Features

- ComfortZone: 210
- swivel range adjustable in 4 steps 60°, 110°, 150° or 360°
- LaminarSpray, ShowerSpray
- lockable shower spray, spray returns through pressing spray diverter and spray returns automatically through handle closing
- quick-connect hose
- connection dimension: DN15
- maximum flow rate at 3 bar: 6 l/min
- ceramic cartridge
- connection type: G ⅜ hose connections
- temperature limitation adjustable
- integrated non-return valve
- suitable for continuous flow water heaters
- extension length up to: 50 cm
- tap hole with Ø 35 mm required

Technology

Pull-out | Comfort Zone | EcoSmart | Quick Clean

Spray Types

Shower Spray | Laminar Spray

Brand	hansgrohe
Art. Name	**Talis M54** Single lever kitchen mixer 210, pull-out spray, 2jet
Art. Nr.	72800003
Surface	Chrome

Flow chart

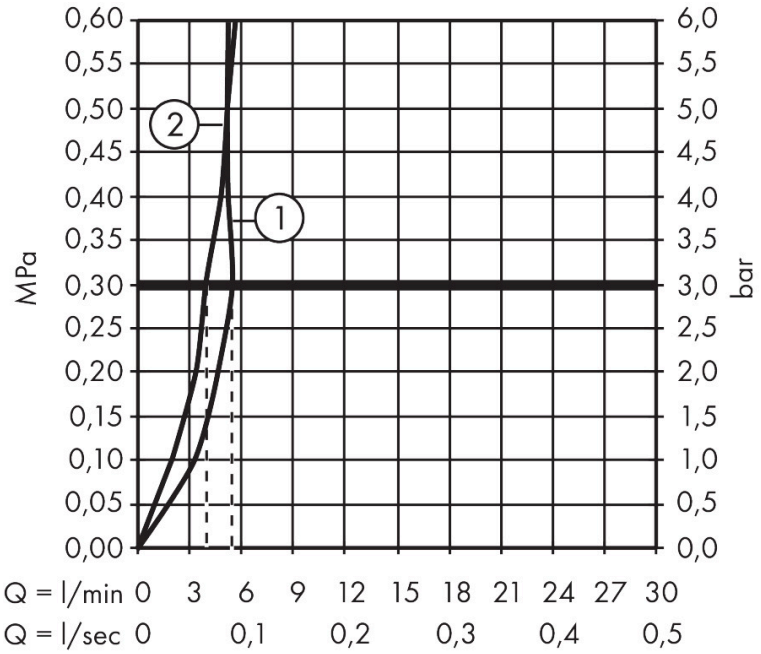

1 Shower spray
2 Normal spray

Brand	hansgrohe
Art. Name	**Talis M54** Single lever kitchen mixer 210, pull-out spray, 2jet
Art. Nr.	72800003
Surface	Chrome

Spare Parts Drawing for build year: > 04/20

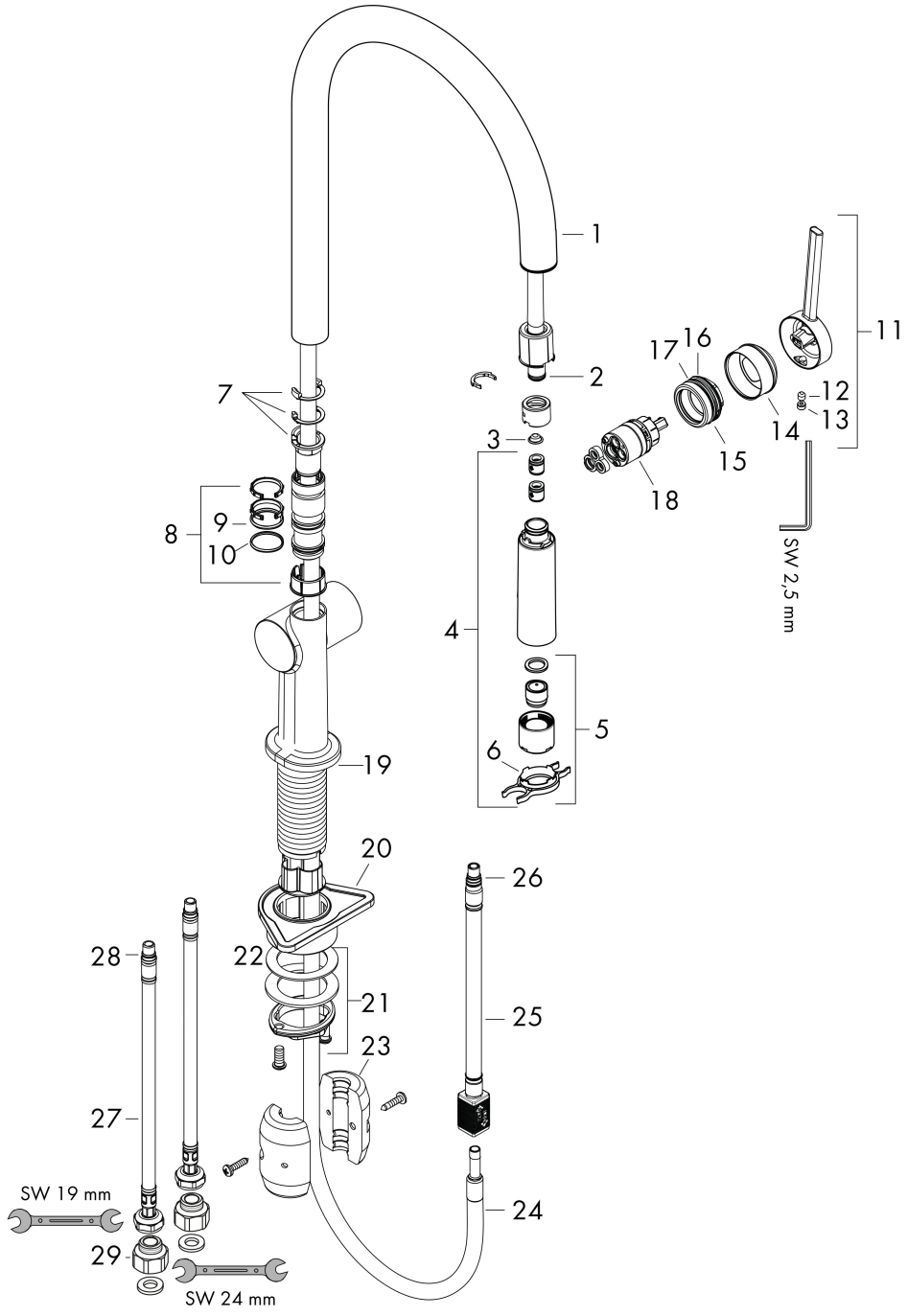

Brand	hansgrohe
Art. Name	**Talis M54** Single lever kitchen mixer 210, pull-out spray, 2jet
Art. Nr.	72800003
Surface	Chrome

Spare parts list for build year: > 04/20

Pos.	Description	Articlenumber
1	spout cpl.	93739000
2	O-ring 8x2	98112000
3	filter	98516000
4	handspray	93741003
5	spray former	93342003
6	service tool	95910000
7	set of locating rings (60° / 110° / 150°)	94911000
8	set of lever collars	98365000
9	O-ring 19x2	98426000
10	O-ring 20x1,5	98197000
11	handle	93736000
12	hollow set screw M5x5	98446000
13	screw cover	93735610
14	flange	93737000
15	nut	93738000
16	O-ring 30x1,5	98433000
17	O-ring 29x2	98391000
18	cartridge, assy	93740000
19	O-ring 36x3	98052000
20	support	97523000
21	fixing set (Ø 34)	95049000
22	lever collar	97548000
23	weight	92500000
24	hose	93745000
25	hose	93744000
26	O-ring 7x1,5	98422000
27	connection hose 900 mm M8x0,75 G3/8	93746000
28	O-ring 6,6x1,6	93019000
29	set of adapters	93395000