Brand	hansgrohe
Art. Name	**Talis E** Single lever basin mixer for concealed installation wall-mounted with spout 22.5 cm
Art. Nr.	71734140
Surface	Brushed Bronze

Product picture

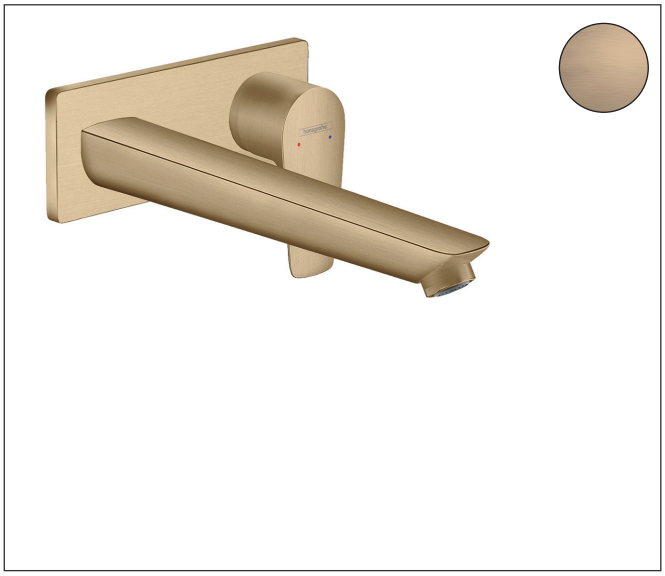

Drawing

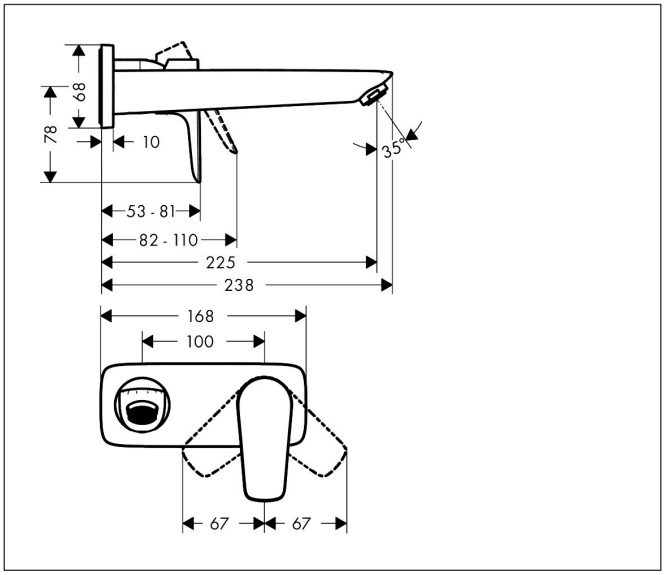

Features

- consists of: single lever basin mixer for concealed installation wall-mounted, waste set
- projection: 225 mm
- handle variant: lever handle
- spray type: NormalSpray
- maximum flow rate at 3 bar: 5 l/min
- ceramic cartridge
- temperature limitation adjustable
- suitable for continuous flow water heaters
- non-closing waste set
- material waste set: metal
- connection type: basic set
- connection dimension: DN15
- handle can be positioned on the right or left, depending on the basic set installation
- EU taxonomy: max. 6 l/min - Substantial Contribution (SC) possible

Technology

EcoSmart | AirPower | Quick Clean

Spray Types

Normal Spray

Brand	hansgrohe
Art. Name	**Talis E** Single lever basin mixer for concealed installation wall-mounted with spout 22.5 cm
Art. Nr.	71734140
Surface	Brushed Bronze

Required parts

Product picture	Art. Name	Art. Nr.
	hansgrohe Basic set for single lever basin mixer for concealed installation wall-mounted	13622180

Brand	hansgrohe
Art. Name	**Talis E** Single lever basin mixer for concealed installation wall-mounted with spout 22.5 cm
Art. Nr.	71734140
Surface	Brushed Bronze

Flow chart

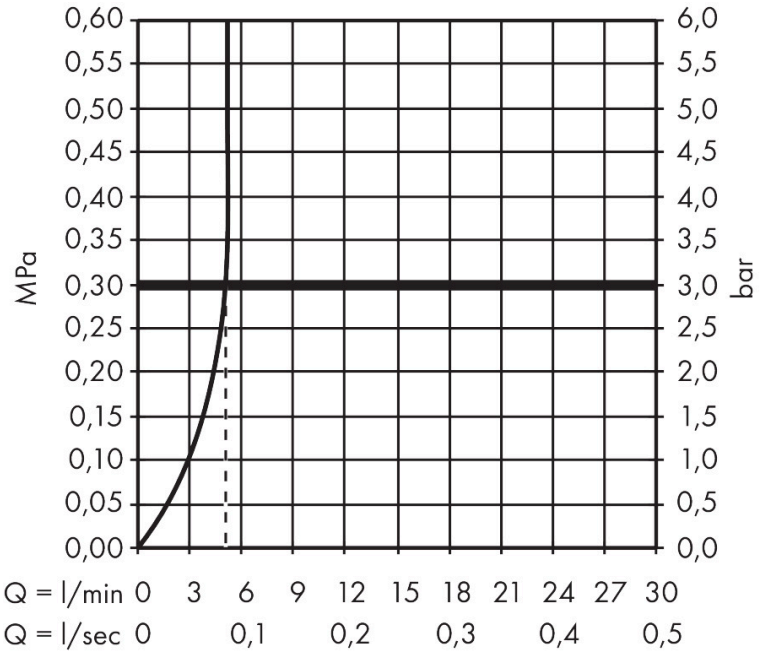

Brand	hansgrohe
Art. Name	**Talis E** Single lever basin mixer for concealed installation wall-mounted with spout 22.5 cm
Art. Nr.	71734140
Surface	Brushed Bronze

Installation examples

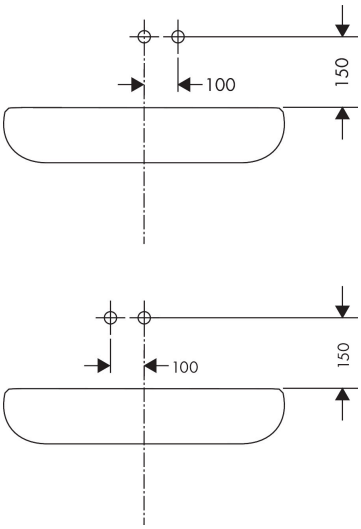

Dimensions may vary due to ceramic tolerances related to the production process.

Brand	hansgrohe
Art. Name	**Talis E** Single lever basin mixer for concealed installation wall-mounted with spout 22.5 cm
Art. Nr.	71734140
Surface	Brushed Bronze

Spare Parts Drawing for build year: > 07/19

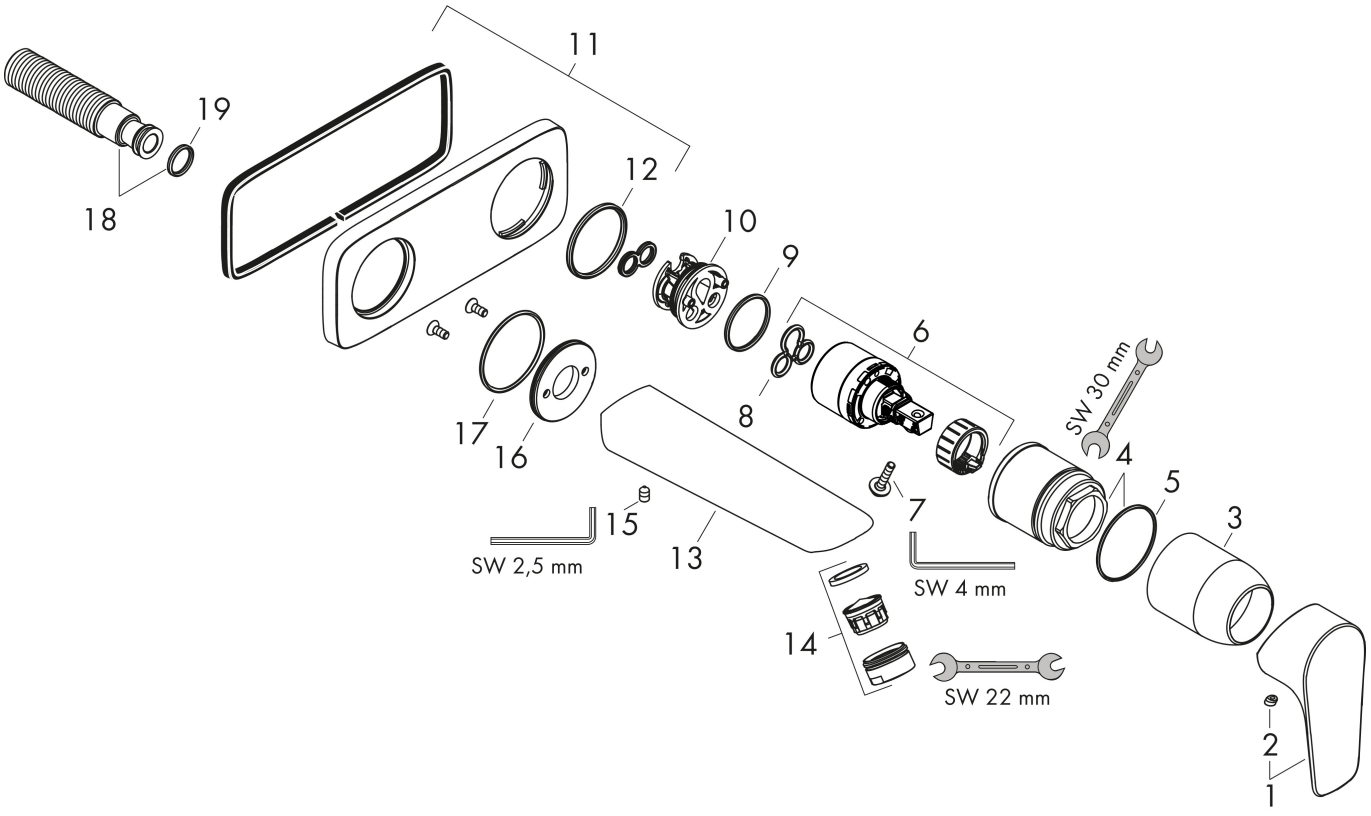

Brand	hansgrohe
Art. Name	**Talis E** Single lever basin mixer for concealed installation wall-mounted with spout 22.5 cm
Art. Nr.	71734140
Surface	Brushed Bronze

Spare parts list for build year: > 07/19

Pos.	Description	Articlenumber
1	handle	92666140
2	screw cover	96338000
3	sleeve	98790140
4	nut	95622000
5	O-ring 39x1,5	98400000
6	cartridge, assy	92730000
7	locking screw for handle	95140000
8	seal	95008000
9	O-ring 26x2	98147000
10	adapter for cartridge	95779000
11	escutcheon	92239140
12	O-ring 43x3	98418000
13	spout 225 mm	92714140
14	aerator M24x1 (5 l/min)	13185140
15	hollow set screw M5x8	92851000
16	escutcheon	95642140
17	O-Ring 30x2	98186000
18	connecting thread G½	95626000
19	O-ring 13x2	98128000
a	waste	50001140
b	extension set 25 mm for 13622180	31971000