Brand	hansgrohe
Art. Name	**Logis** Toilet paper holder
Art. Nr.	40526820
Surface	Brushed Nickel

Product picture

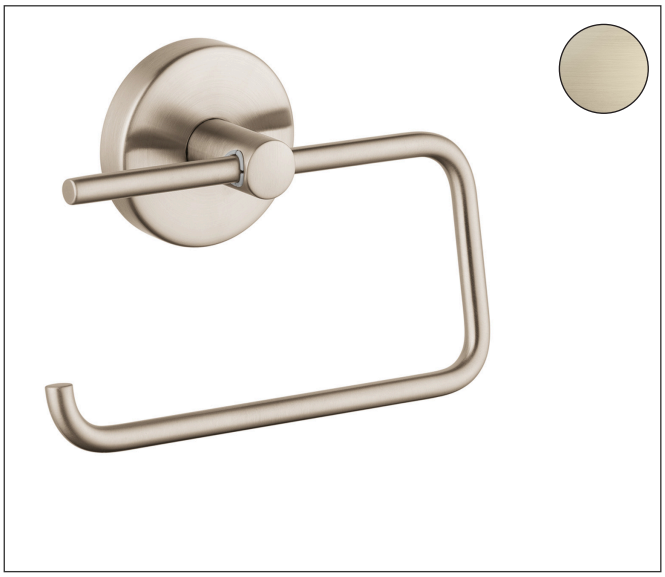

Drawing

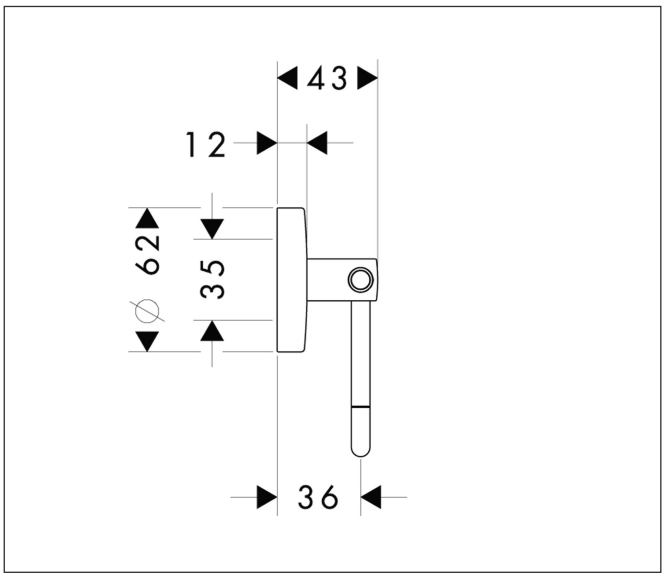

Features

- wall-mounted
- material: brass
- holder material: metal
- with mounting material
- concealed fastening
- drilling distance: 35 mm
- diameter drill hole: 6 mm

Brand	hansgrohe
Art. Name	**Logis** Toilet paper holder
Art. Nr.	40526820
Surface	Brushed Nickel

Spare Parts Drawing for build year: > 11/08

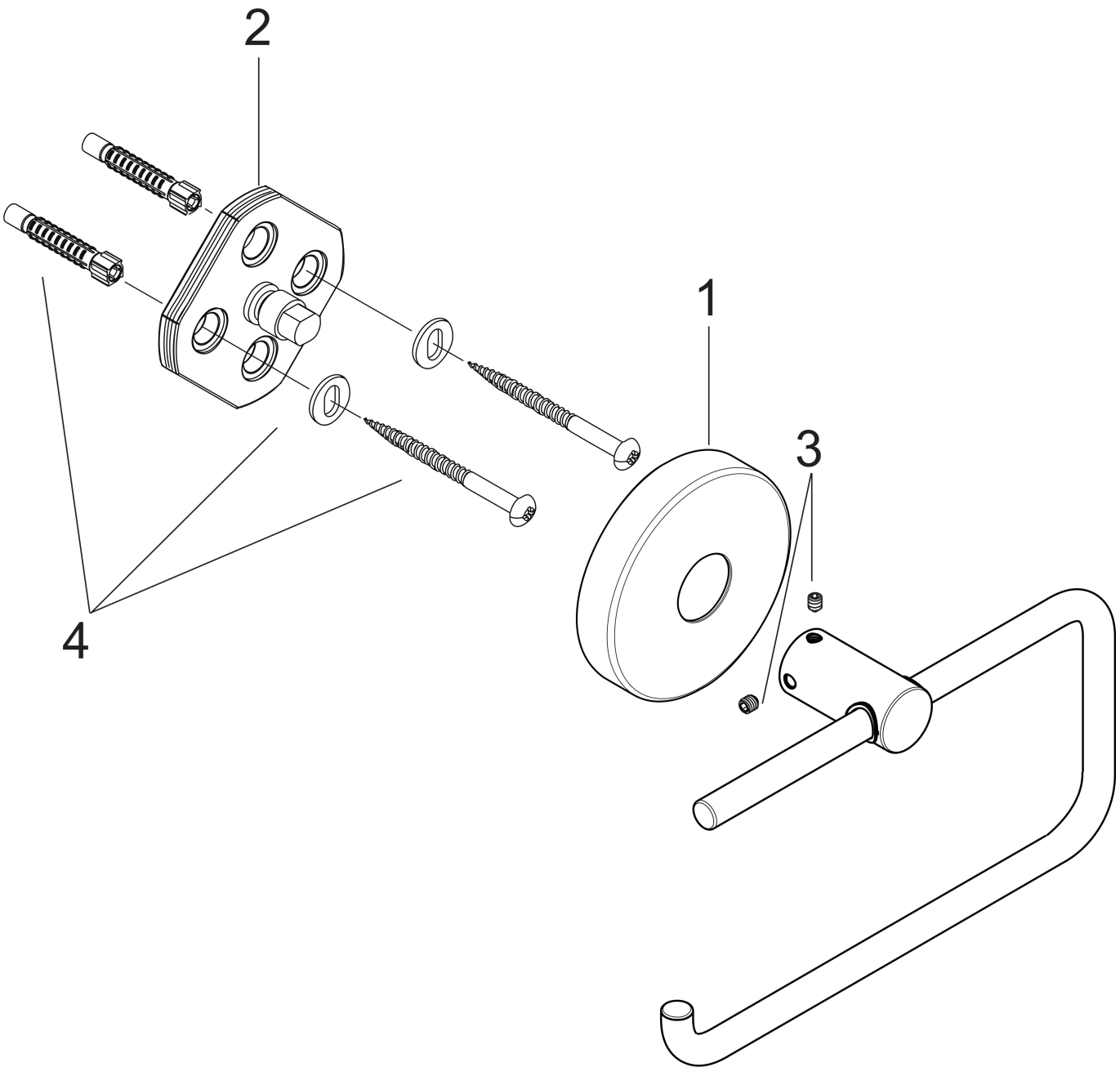

Brand	hansgrohe
Art. Name	**Logis** Toilet paper holder
Art. Nr.	40526820
Surface	Brushed Nickel

Spare parts list for build year: > 11/08

Pos.	Description	Articlenumber
1	escutcheon	98538820
2	support element	98539000
3	hollow set screw M4x4	98540000
4	mounting set	96179000