Brand	hansgrohe
Art. Name	**Metropol** Single lever bidet mixer with lever handle and push-open waste set
Art. Nr.	32520140
Surface	Brushed Bronze

Product picture

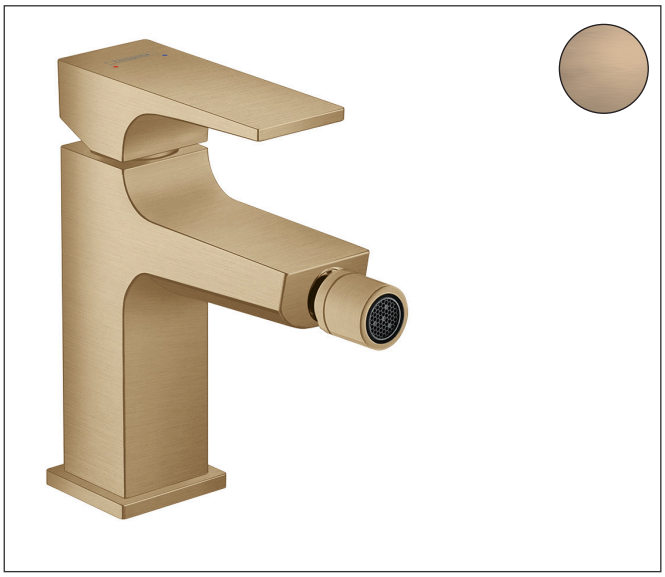

Drawing

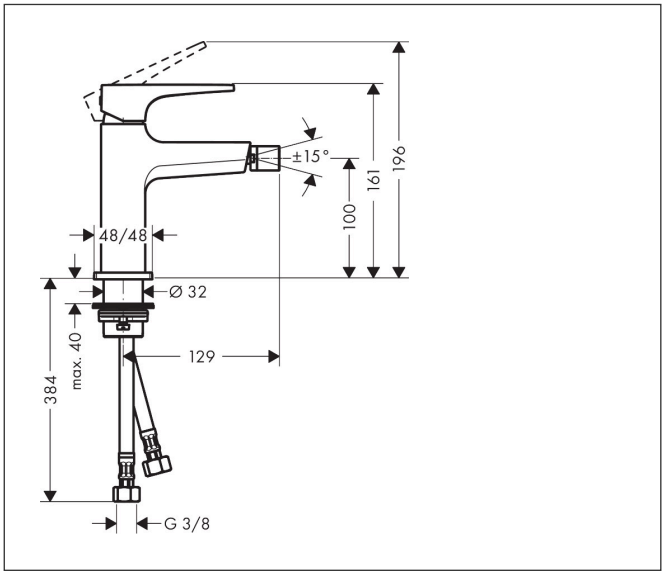

Features

- consists of: single lever bidet mixer, waste set
- projection: 129 mm
- spout height: 100 mm
- ball-pivot joint
- spray type: LaminarSpray
- maximum flow rate at 3 bar: 7,5 l/min
- ceramic cartridge
- temperature limitation adjustable
- suitable for continous flow water heaters
- material waste set: metal
- connection type: G ⅜ hose connections
- connection dimension: DN15
- flow rate class: O

Spray Types



Brand	hansgrohe
Art. Name	**Metropol** Single lever bidet mixer with lever handle and push-open waste set
Art. Nr.	32520140
Surface	Brushed Bronze

Flow chart

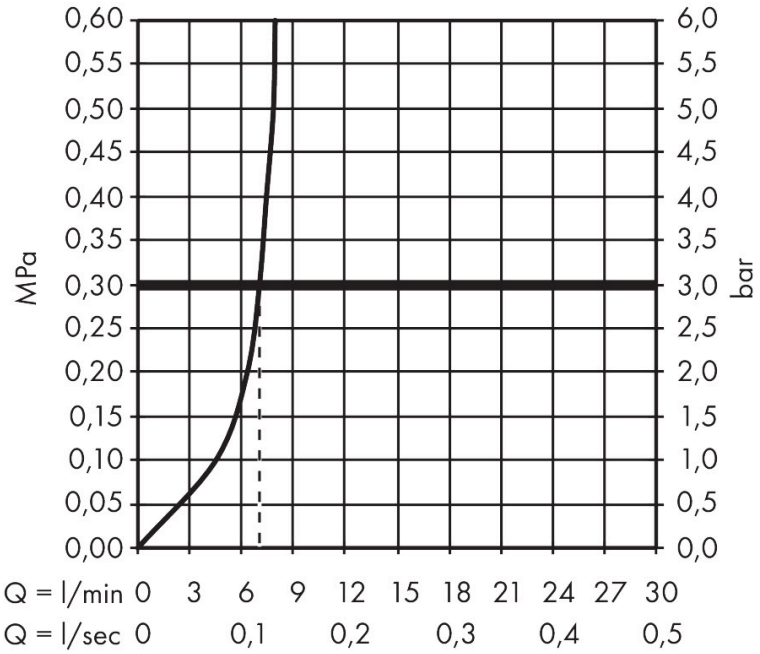

Brand	hansgrohe
Art. Name	**Metropol** Single lever bidet mixer with lever handle and push-open waste set
Art. Nr.	32520140
Surface	Brushed Bronze

Spare Parts Drawing for build year: > 07/19

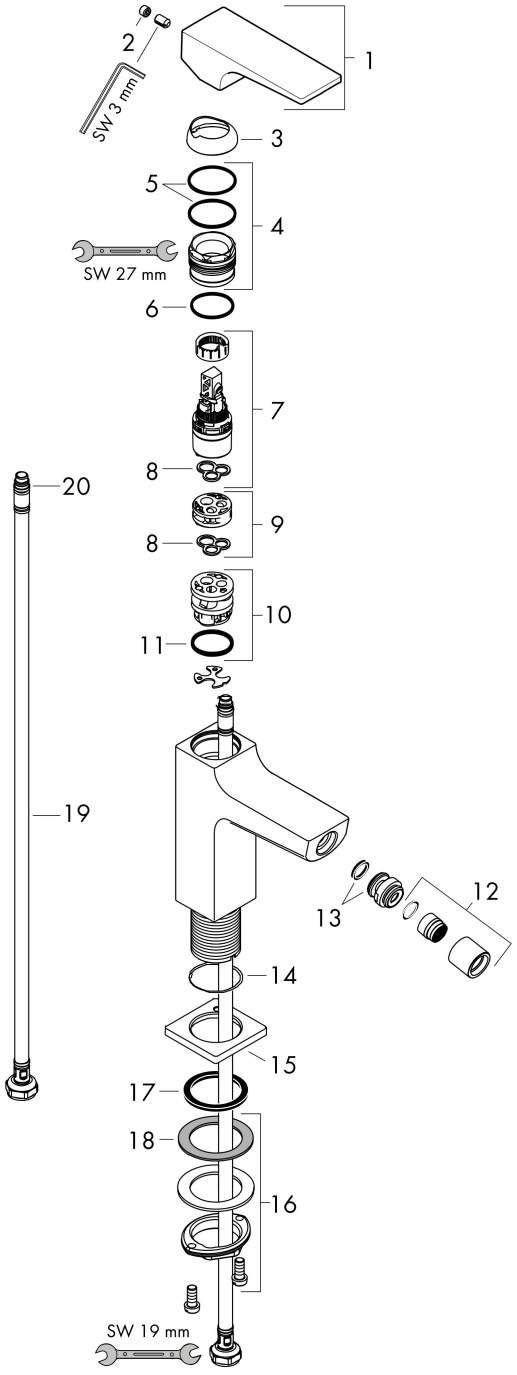

Brand	hansgrohe
Art. Name	**Metropol** Single lever bidet mixer with lever handle and push-open waste set
Art. Nr.	32520140
Surface	Brushed Bronze

Spare parts list for build year: > 07/19

Pos.	Description	Articlenumber
1	handle	92995140
2	screw cover	95704000
3	flange	92625140
4	nut	92689000
5	O-ring 27x1,5	92527000
6	O-ring 25x1,5	98146000
7	cartridge, assy	97685000
8	seal	98865000
9	adapter for cartridge	92628000
10	adapter for cartridge	98866000
11	O-ring 23x2	98398000
12	aerator laminar M16x1 (7 l/min)	97360140
13	ball joint	97362140
14	O-ring 32x1,5	92936000
15	escutcheon	93048140
16	fixing set (Ø 32)	13961000
17	flat seal	98749000
18	lever collar	97548000
19	connection hose 450 mm M8x0,75 G3/8	97206000
20	O-ring 6,6x1,6	93019000
a	push-open waste set	50100140
b	fixation extension 35 mm	13898000