Brand	hansgrohe
Art. Name	**Decor** Single lever basin mixer 190 without waste set
Art. Nr.	31518343
Surface	Brushed Black Chrome

Product picture



Drawing

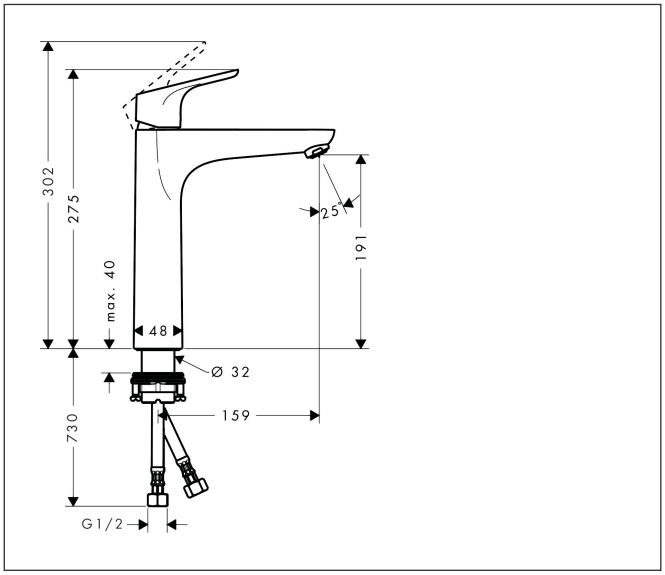

Features

- ComfortZone: 190
- projection: 159 mm
- spout height: 191 mm
- handle variant: lever handle
- spray type: NormalSpray
- maximum flow rate at 3 bar: 5 l/min
- ceramic cartridge
- temperature limitation adjustable
- suitable for continuous flow water heaters
- connection type: G ½ connections
- connection dimension: DN15

Technology



Spray Types



Brand	hansgrohe
Art. Name	**Decor** Single lever basin mixer 190 without waste set
Art. Nr.	31518343
Surface	Brushed Black Chrome

Flow chart

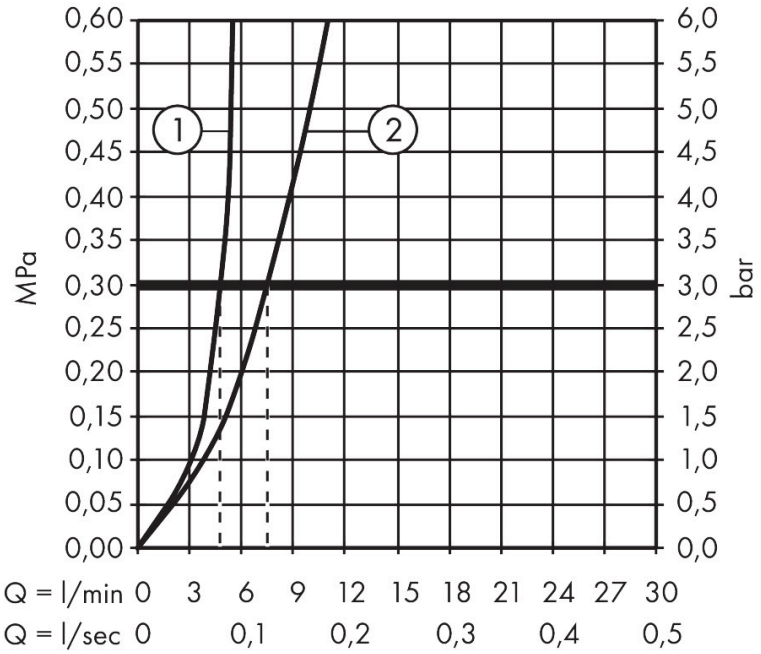

1 With flow limiter
2 Without flow limiter