Brand	hansgrohe
Art. Name	**Decor** Single lever basin mixer 190 without waste set
Art. Nr.	31518223
Surface	Chrome

Product picture



Drawing

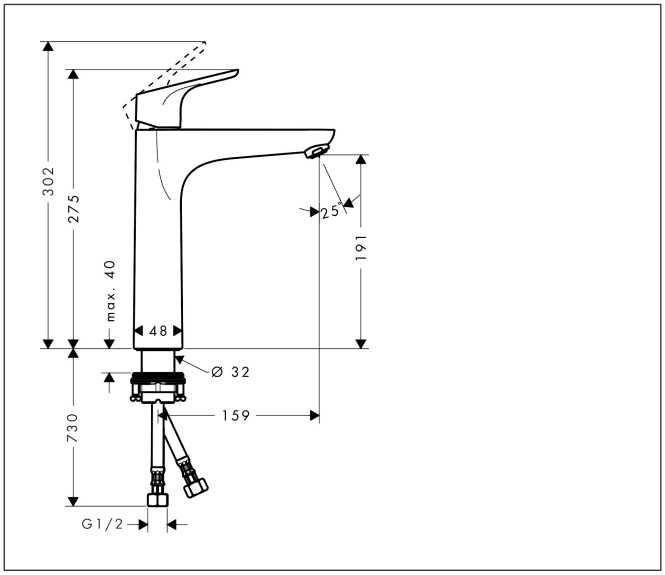

Features

- ComfortZone: 190
- projection: 159 mm
- spout height: 191 mm
- handle variant: lever handle
- spray type: NormalSpray
- maximum flow rate at 3 bar: 5 l/min
- ceramic cartridge
- temperature limitation adjustable
- suitable for continuous flow water heaters
- connection type: G ½ connections
- connection dimension: DN15

Technology

Comfort Zone | EcoSmart | AirPower | Quick Clean

Spray Types

Normal Spray

Brand	hansgrohe
Art. Name	**Decor** Single lever basin mixer 190 without waste set
Art. Nr.	31518223
Surface	Chrome

Flow chart

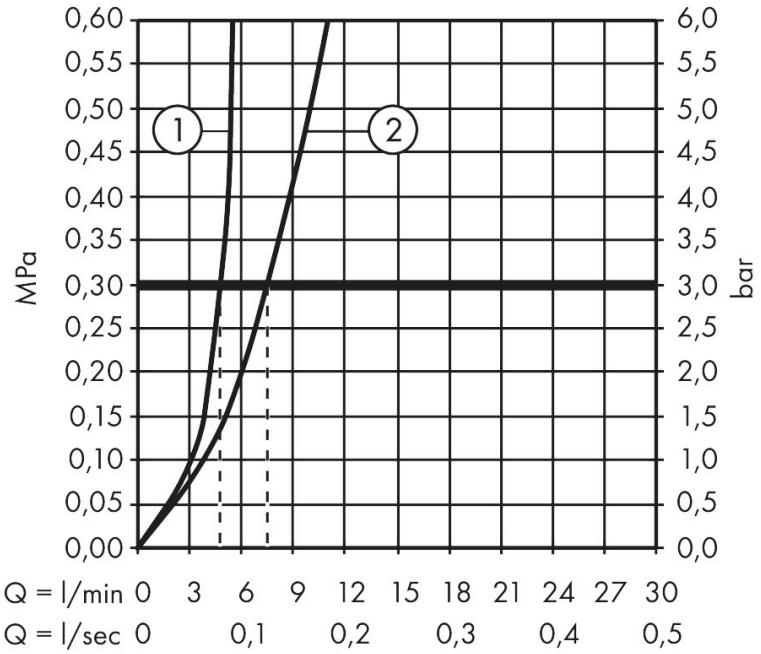

1 With flow limiter
2 Without flow limiter

Brand	hansgrohe
Art. Name	**Decor** Single lever basin mixer 190 without waste set
Art. Nr.	31518223
Surface	Chrome

Spare Parts Drawing for build year: > 04/17

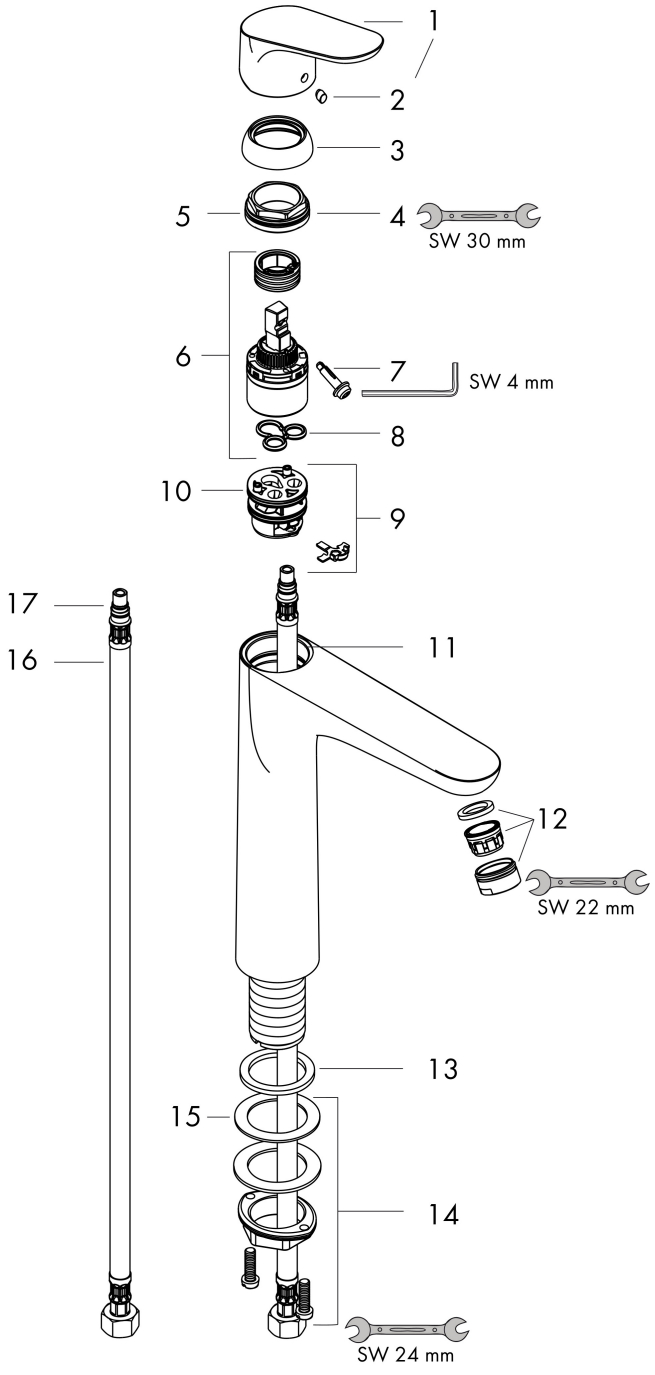

Brand	hansgrohe
Art. Name	**Decor** Single lever basin mixer 190 without waste set
Art. Nr.	31518223
Surface	Chrome

Spare parts list for build year: > 04/17

Pos.	Description	Articlenumber
1	handle	98532000
2	screw cover	96338000
3	flange	97406000
4	nut	97209000
5	O-Ring 32x2	98193000
6	cartridge, assy	92730000
7	locking screw for handle	95140000
8	seal	95008000
9	adapter for cartridge	98750000
10	O-Ring 30x2	98186000
11	O-ring 35x2	92604000
12	aerator M24x1 (5 l/min)	13185000
13	flat seal	98749000
14	fixing set (Ø 32)	13961000
15	lever collar	97548000
16	connection hose 900 mm M8x0,75 G½	97489000
17	O-ring 7x1,5	98422000
a	fixation extension 35 mm	13898000