Brand	hansgrohe
Art. Name	**WallStoris** Wall bar 70 cm
Art. Nr.	27904670
Surface	Matt Black

Product picture

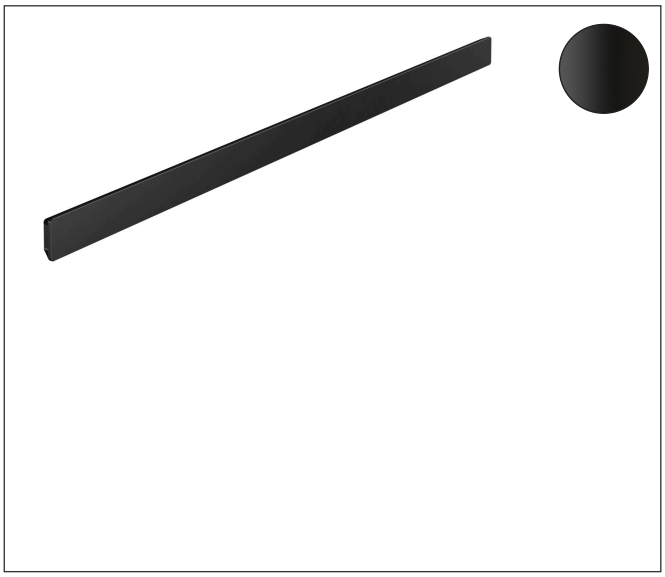

Drawing

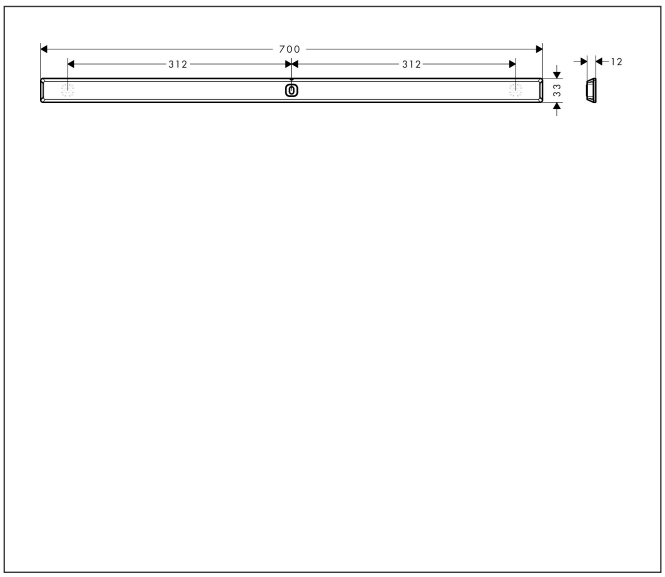

Features

- consists of: carrier bar, decorative bar
- wall-mounted
- suitable for horizontal and vertical installation
- horizontal installation suitable for wall bar
- ideal for tiles, glass, metal
- application - glue or drill
- holding force: 5 kg
- length: 0,7 mm
- concealed fastening
- drilling distance: 312 mm

Technology



Brand	hansgrohe
Art. Name	**WallStoris** Wall bar 70 cm
Art. Nr.	27904670
Surface	Matt Black

Spare Parts Drawing for build year: > 10/21

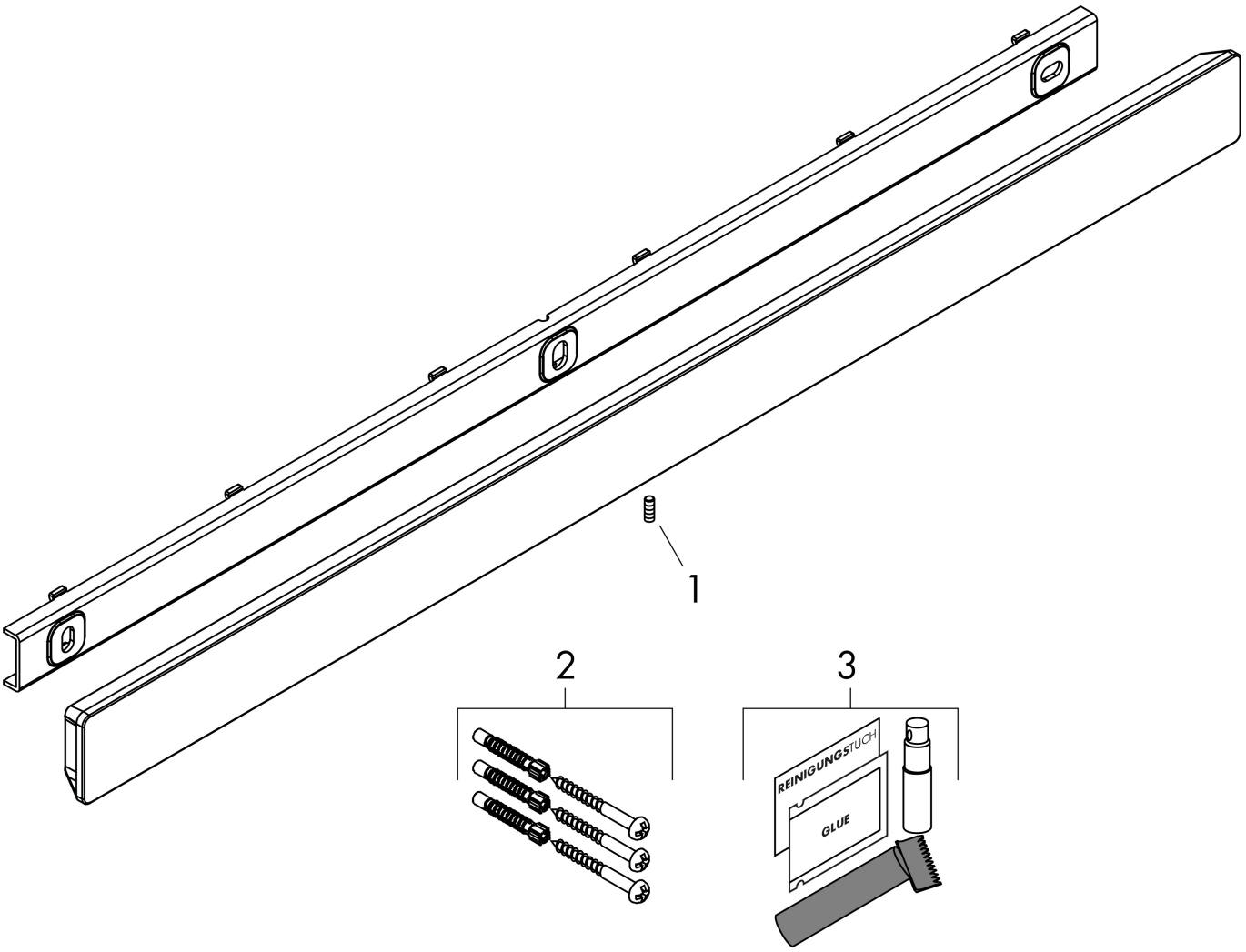

Brand	hansgrohe
Art. Name	**WallStoris** Wall bar 70 cm
Art. Nr.	27904670
Surface	Matt Black

Spare parts list for build year: > 10/21

Pos.	Description	Articlenumber
1	hollow set screw M3x8	94793000
2	mounting set	94268000
3	mounting kit	94450000