Brand	hansgrohe
Art. Name	**Raindance Select S** Overhead shower 300 2jet with shower arm
Art. Nr.	27378400
Surface	White/Chrome

Product picture



Drawing

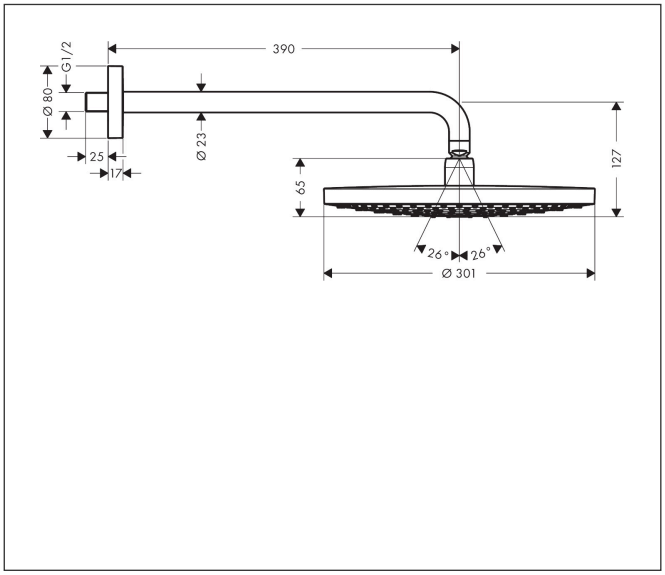

Features

- consists of: overhead shower, shower arm
- shower head size: 301 mm
- spray type: RainAir, Rain
- QuickClean: limescale deposits can simply be rubbed off with your finger
- flow rate Rain spray at 3 bar: 17 l/min
- flow rate RainAir spray at 3 bar: 17 l/min
- maximum flow rate at 3 bar: 17 l/min
- minimum flow pressure: 1,5 bar
- select button on overhead shower
- overhead shower angle adjustable
- material spray disc: metal
- spray disc surface: white
- spray disc removable for cleaning
- shower arm length: 390 mm
- installation: wall
- connection thread: G ½
- connection dimension: DN15
- suitable for continous flow water heaters

Technology



Spray Types



Brand	hansgrohe
Art. Name	**Raindance Select S** Overhead shower 300 2jet with shower arm
Art. Nr.	27378400
Surface	White/Chrome

Flow chart

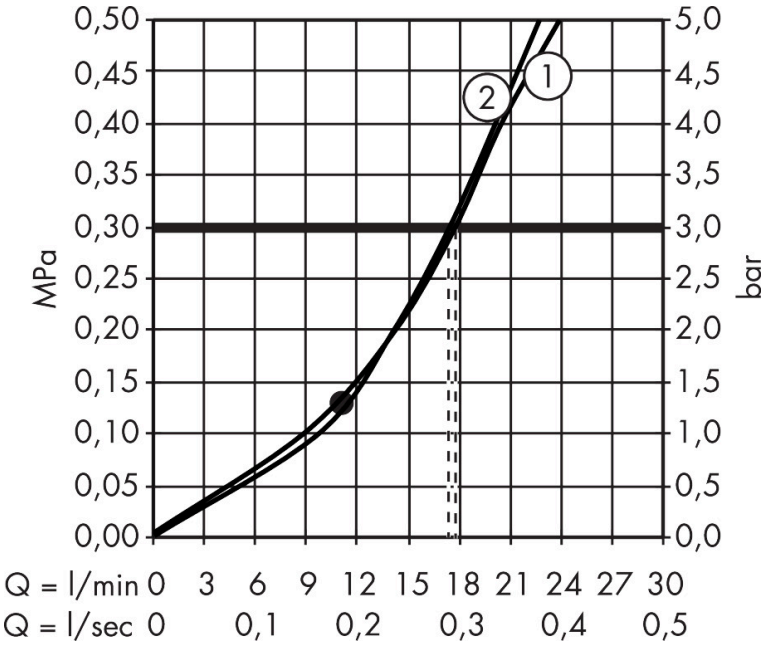

1 Rain
2 RainAir
3 Rain + Booster

The consumption was measured in combination with the appropriate fittings (thermostat/mixer/in-wall valve) to reflect actual application in practice.

Brand	hansgrohe
Art. Name	**Raindance Select S** Overhead shower 300 2jet with shower arm
Art. Nr.	27378400
Surface	White/Chrome

Installation examples

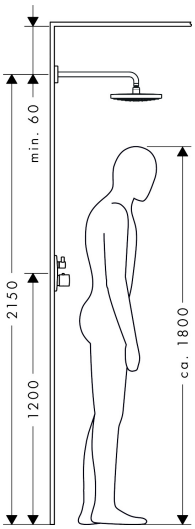

Dimensions may vary due to ceramic tolerances related to the production process.

Brand	hansgrohe
Art. Name	**Raindance Select S** Overhead shower 300 2jet with shower arm
Art. Nr.	27378400
Surface	White/Chrome

Spare Parts Drawing for build year: > 02/18

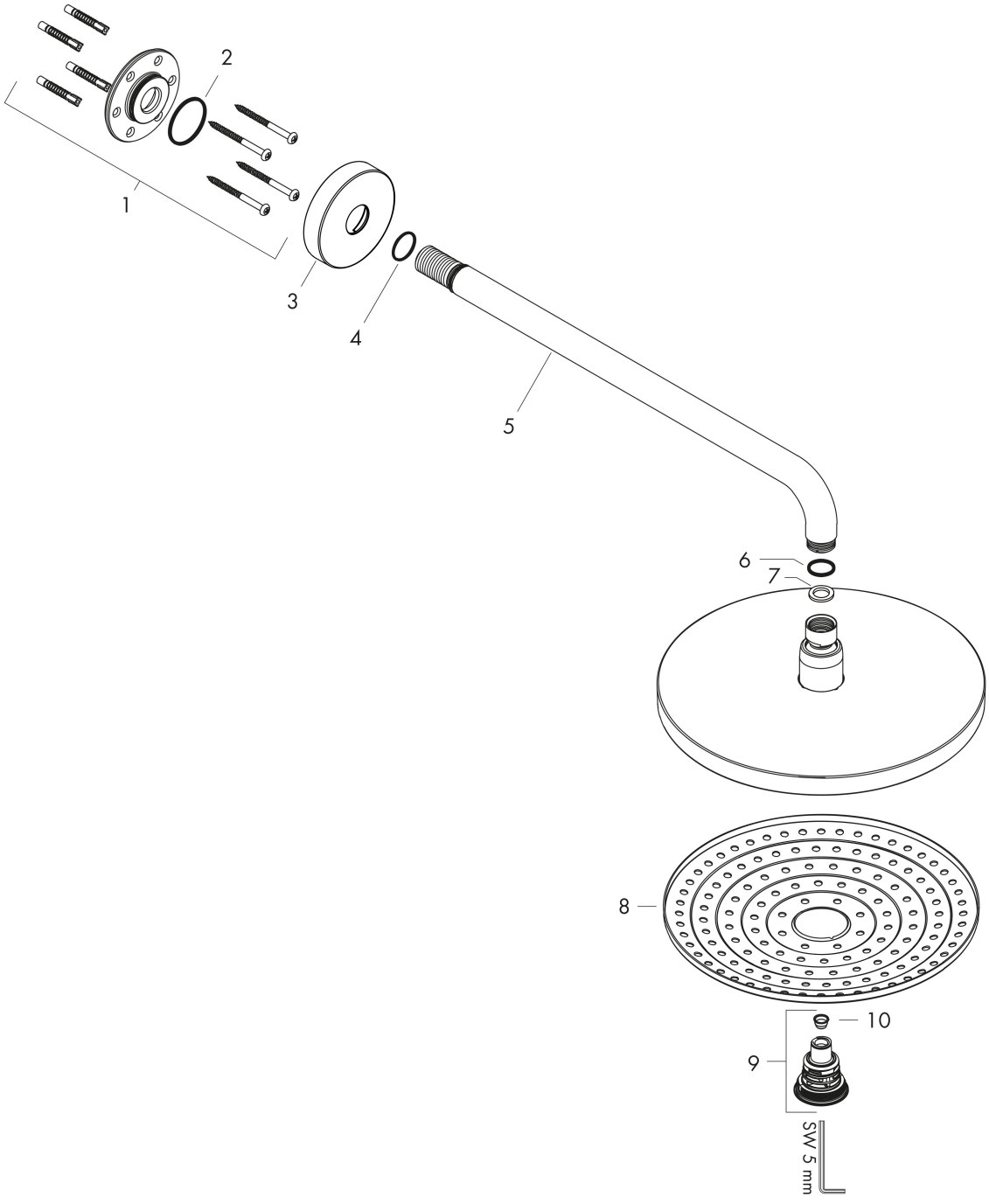

Brand	hansgrohe
Art. Name	**Raindance Select S** Overhead shower 300 2jet with shower arm
Art. Nr.	27378400
Surface	White/Chrome

Spare parts list for build year: > 02/18

Pos.	Description	Articlenumber
1	mounting kit	95208000
2	O-ring 34x2	98383000
3	escutcheon Ø 80 mm	98940000
4	O-ring 20x1,5	98197000
5	shower arm	27446000
6	O-ring 16x2	98133000
7	seal	98058000
8	spray body	92292450
9	selector assy	98343000
10	filter	97735000