Brand	hansgrohe
Art. Name	**Croma Select S** Showerpipe 280 1jet EcoSmart with thermostat and hand shower Raindance Select S 120 3jet
Art. Nr.	26891140
Surface	Brushed Bronze

Product picture

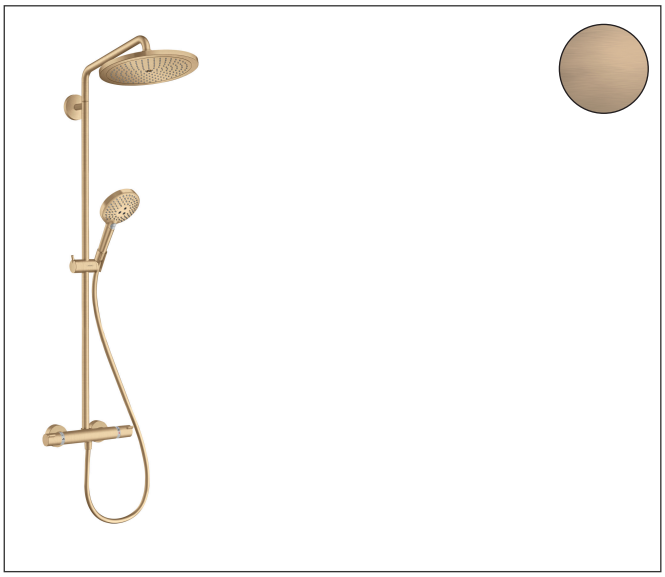

Drawing

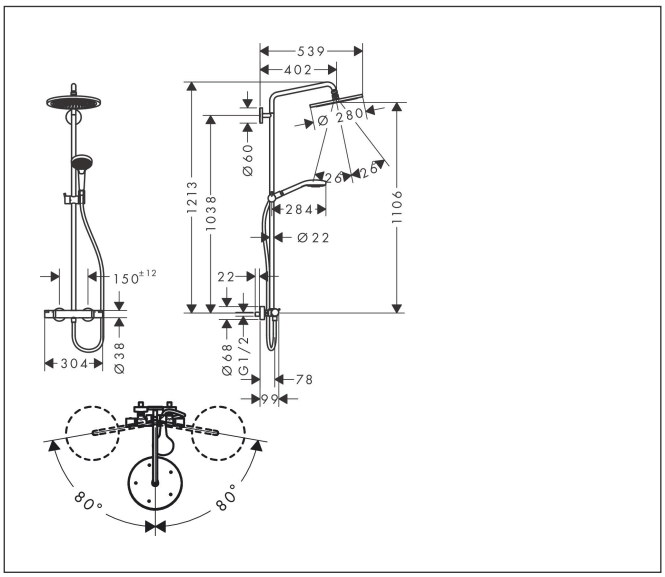

Features

- consists of: overhead shower, hand shower, shower thermostat, shower hose, slider, shower bar
- overhead shower Croma 280
- shower head size overhead shower: 280 mm
- ball-joint: overhead shower angle adjustable
- QuickClean: Limescale deposits can simply be rubbed off with your finger
- spray type overhead shower: RainAir
- flow rate RainAir spray at 3 bar: 8,7 l/min
- flow rate Rain spray at 3 bar: 8,2 l/min
- spray type hand shower: RainAir, Rain, Whirl
- maximum flow rate of hand shower at 3 bar: 8,4 l/min
- function from: 7,2 l/min
- maximum flow rate for Showerpipe at 3 bar: 9 l/min
- minimum flow pressure: 2,2 bar
- max. operating pressure: 10 bar
- height-adjustable slider
- shower arm length overhead shower: 400 mm
- swivelling shower arm
- thermostat Ecostat Comfort
- safety stop at 40°C
- adjustable hot water limitation
- outlets controlled via turning handle
- suitable for continuous flow water heaters
- mounting type: exposed installation

Technology

Select · XXL Performance · EcoSmart · AirPower · Quick Clean

Spray Types

Whirl · Rain · Rain Air

Brand	hansgrohe
Art. Name	**Croma Select S** Showerpipe 280 1jet EcoSmart with thermostat and hand shower Raindance Select S 120 3jet
Art. Nr.	26891140
Surface	Brushed Bronze

Flow chart

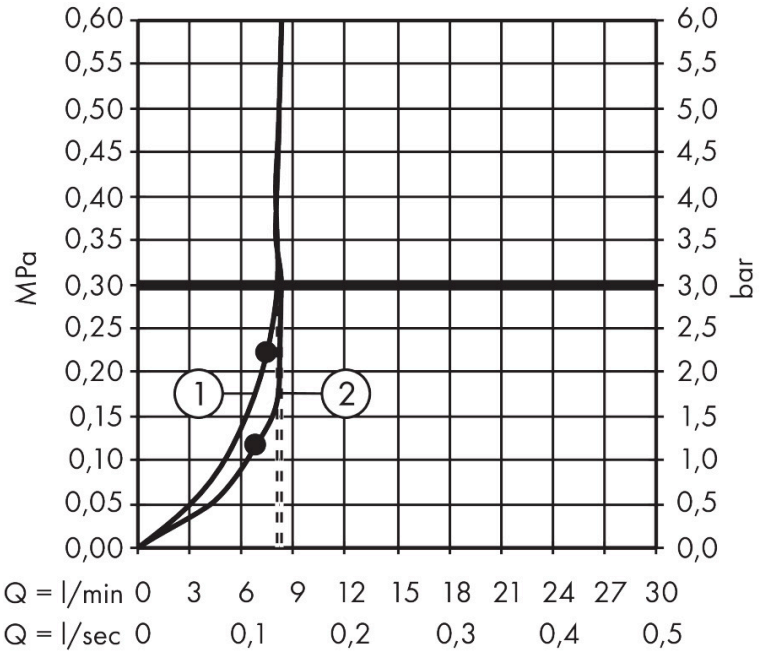

1 Overhead shower
2 Hand shower

Brand	hansgrohe
Art. Name	**Croma Select S** Showerpipe 280 1jet EcoSmart with thermostat and hand shower Raindance Select S 120 3jet
Art. Nr.	26891140
Surface	Brushed Bronze

Installation examples

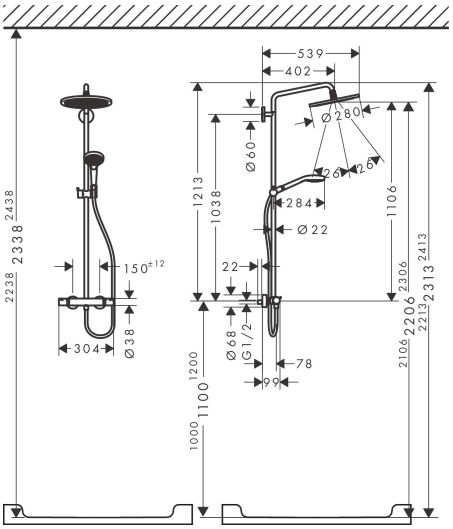

Dimensions may vary due to ceramic tolerances related to the production process.

Brand	hansgrohe
Art. Name	**Croma Select S** Showerpipe 280 1jet EcoSmart with thermostat and hand shower Raindance Select S 120 3jet
Art. Nr.	26891140
Surface	Brushed Bronze

Spare Parts Drawing for build year: > 06/20

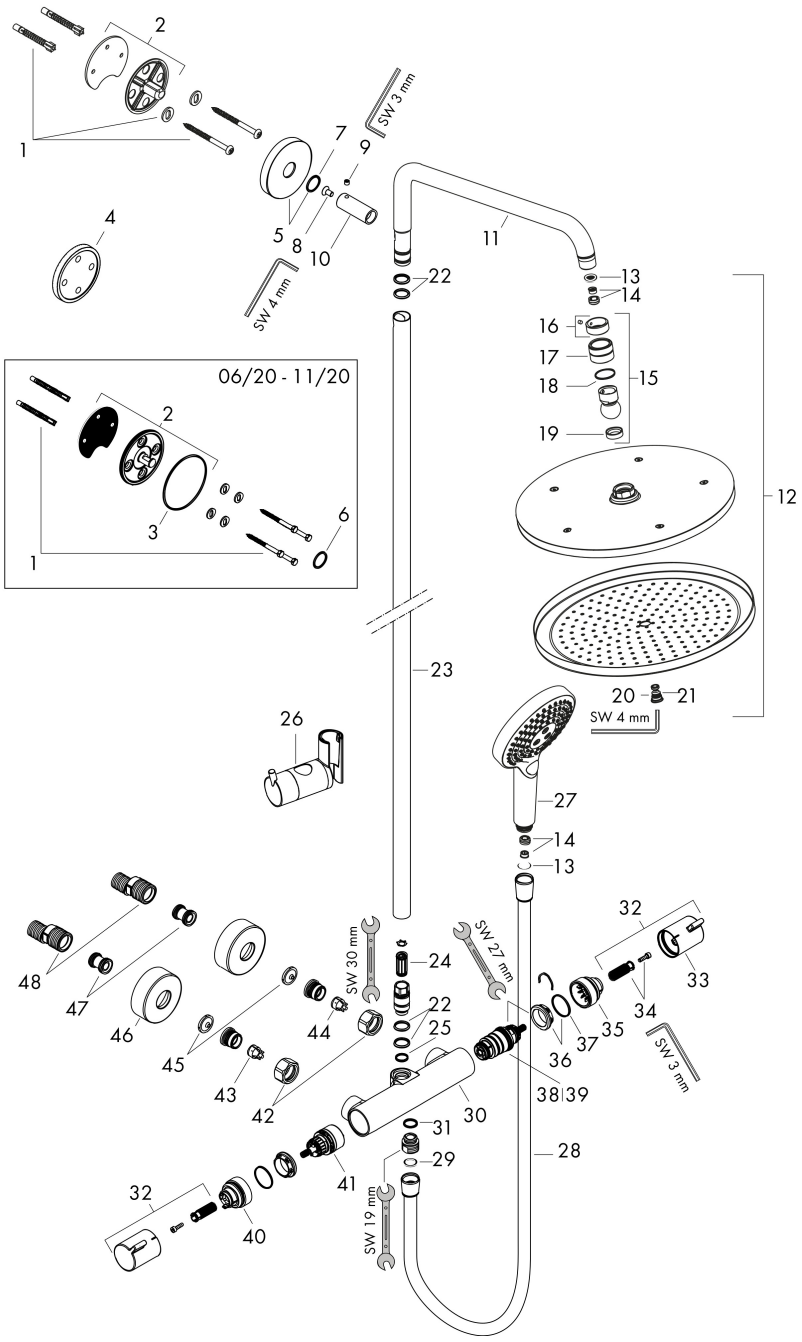

Brand	hansgrohe
Art. Name	**Croma Select S** Showerpipe 280 1jet EcoSmart with thermostat and hand shower Raindance Select S 120 3jet
Art. Nr.	26891140
Surface	Brushed Bronze

Spare parts list for build year: > 06/20

Pos.	Description	Articlenumber
1	mounting set	98716000
2	wall flange	95688000
3	O-Ring 50x2	98187000
4	tile-matching-disk 7 mm	95239140
5	escutcheon Ø 60 mm	95692140
6	O-ring 20x2	98165000
7	O-ring 20x2,5	92602000
8	screw	92137000
9	hollow set screw M6x5	98447000
10	sleeve	92166140
11	shower arm	95985140
12	head shower	26221140
13	filter packing	94246000
14	flow limiter (9 l/min)	95659000
15	ball joint	98941140
16	lock washer	98942140
17	nut	97958140
18	lever collar	97536000
19	seal	97606000
20	air jet (Eco)	95795140
21	O-ring 7x2	98419000
22	O-ring 15x2,5	98131000
23	pipe 1030 mm	95915140
24	noise reduction	95009000
25	O-ring 12x2,25	98382000
26	support, assy	97651140
27	handshower	26531140
28	shower hose Isiflex'B 1,60 m	28276140
29	seal	98058000
30	Thermostat	92147140

Brand	hansgrohe
Art. Name	**Croma Select S** Showerpipe 280 1jet EcoSmart with thermostat and hand shower Raindance Select S 120 3jet
Art. Nr.	26891140
Surface	Brushed Bronze

Spare parts list for build year: > 06/20

Pos.	Description	Articlenumber
31	O-ring 14x2	98129000
32	handle	95836140
33	pushbutton	92848140
34	handle fixing set	95843000
35	safety set	95839000
36	nut	98913000
37	O-ring 26x1,5	98390000
38	thermostat cartridge	98282000
39	cartridge for exchanged connections	92373000
40	stop ring for flow control	95927000
41	shut off unit with selector	98283000
42	set of nuts	96157140
43	non return valve (pressure-resistant up to 2 MPa)	93136000
44	non return valve	96737000
45	filter packing	96922000
46	escutcheon Ø 68 mm	96467140
47	noise reduction	96429000
48	set of S-unions (±12 mm)	94140000