Brand	hansgrohe
Art. Name	**Rainfinity** Hand shower 130 3jet
Art. Nr.	26864700
Surface	Matt White

Product picture



Drawing

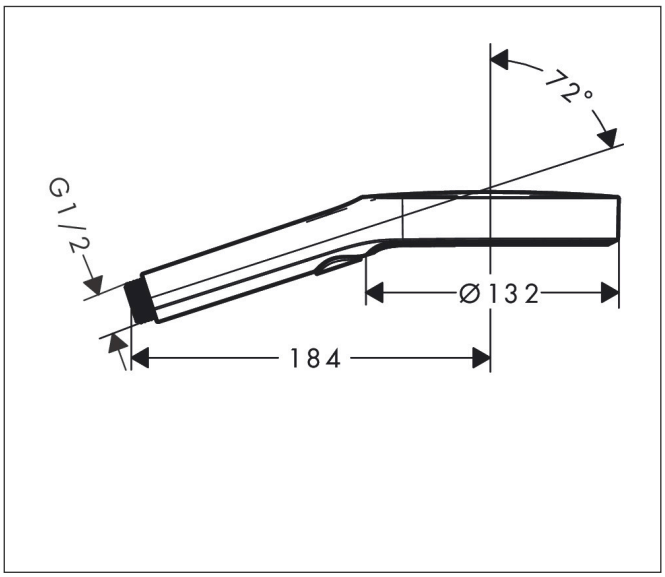

Features

- shower head size: 132 mm
- spray type: PowderRain, Intense PowderRain, MonoRain
- convenient spray selection via Select button
- spray disc surface: easy cleanable aluminium spray disc, graphite
- QuickClean: limescale deposits can simply be rubbed off with your finger
- function from: 5,7 l/min
- maximum flow rate at 3 bar: 14 l/min
- minimum flow pressure: 1,1 bar
- with internal water supply
- rinseable dirt filter
- connection thread: G ½
- suitable for continous flow water heaters

Technology



Spray Types



Brand	hansgrohe
Art. Name	**Rainfinity** Hand shower 130 3jet
Art. Nr.	26864700
Surface	Matt White

Flow chart

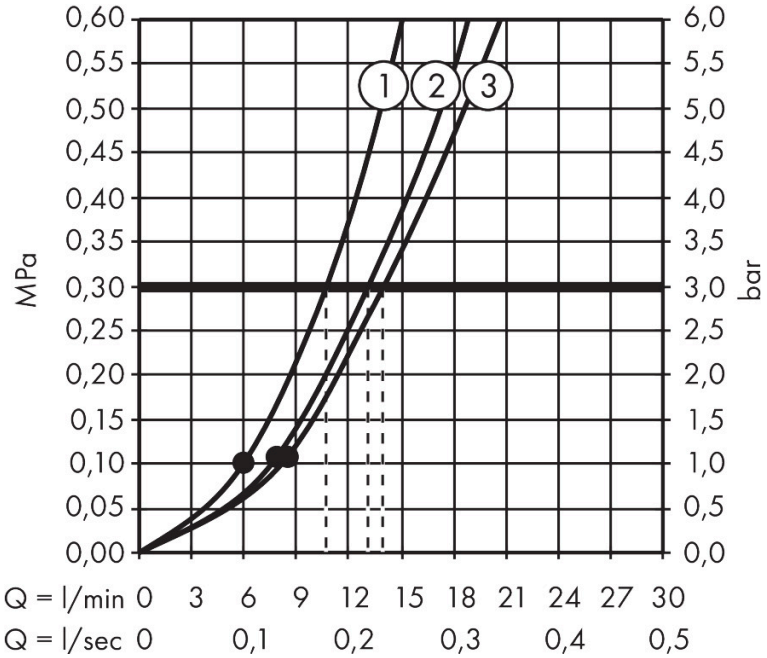

1 MonoRain
2 Mono
3 Intense PowderRain
4 PowderRain

The consumption was measured in combination with the appropriate fittings (thermostat/mixer/in-wall valve) to reflect actual application in practice.

Brand	hansgrohe
Art. Name	**Rainfinity** Hand shower 130 3jet
Art. Nr.	26864700
Surface	Matt White

Spare Parts Drawing for build year: > 07/19

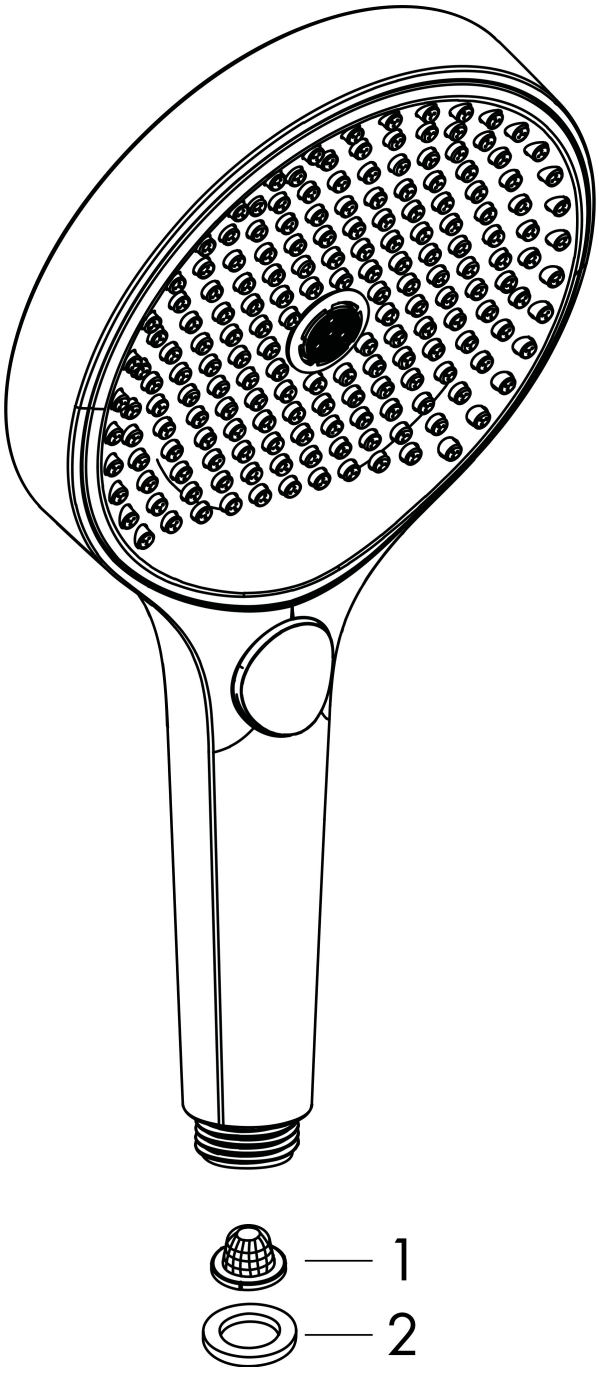

Brand	hansgrohe
Art. Name	**Rainfinity** Hand shower 130 3jet
Art. Nr.	26864700
Surface	Matt White

Spare parts list for build year: > 07/19

Pos.	Description	Articlenumber
1	filter	92672000
2	seal	98058000