Brand	hansgrohe
Art. Name	**Rainfinity** Shelf 500
Art. Nr.	26844700
Surface	Matt White

reddot award 2019
best of the best

GOLD AWARD 2019

INNOVATIVE ARCHITECTURE best of best

GERMAN DESIGN AWARD WINNER 2020

Product picture



Drawing

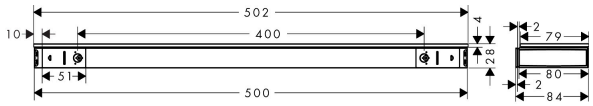

Features

- wall-mounted
- material frame: metal
- material shelf: safety glass
- surface shelf: graphite
- length: 500 mm
- with mounting material
- concealed fastening
- drilling distance: 400 mm
- diameter drill hole: 6 mm

Brand	hansgrohe
Art. Name	**Rainfinity** Shelf 500
Art. Nr.	26844700
Surface	Matt White

Spare Parts Drawing for build year: > 07/19

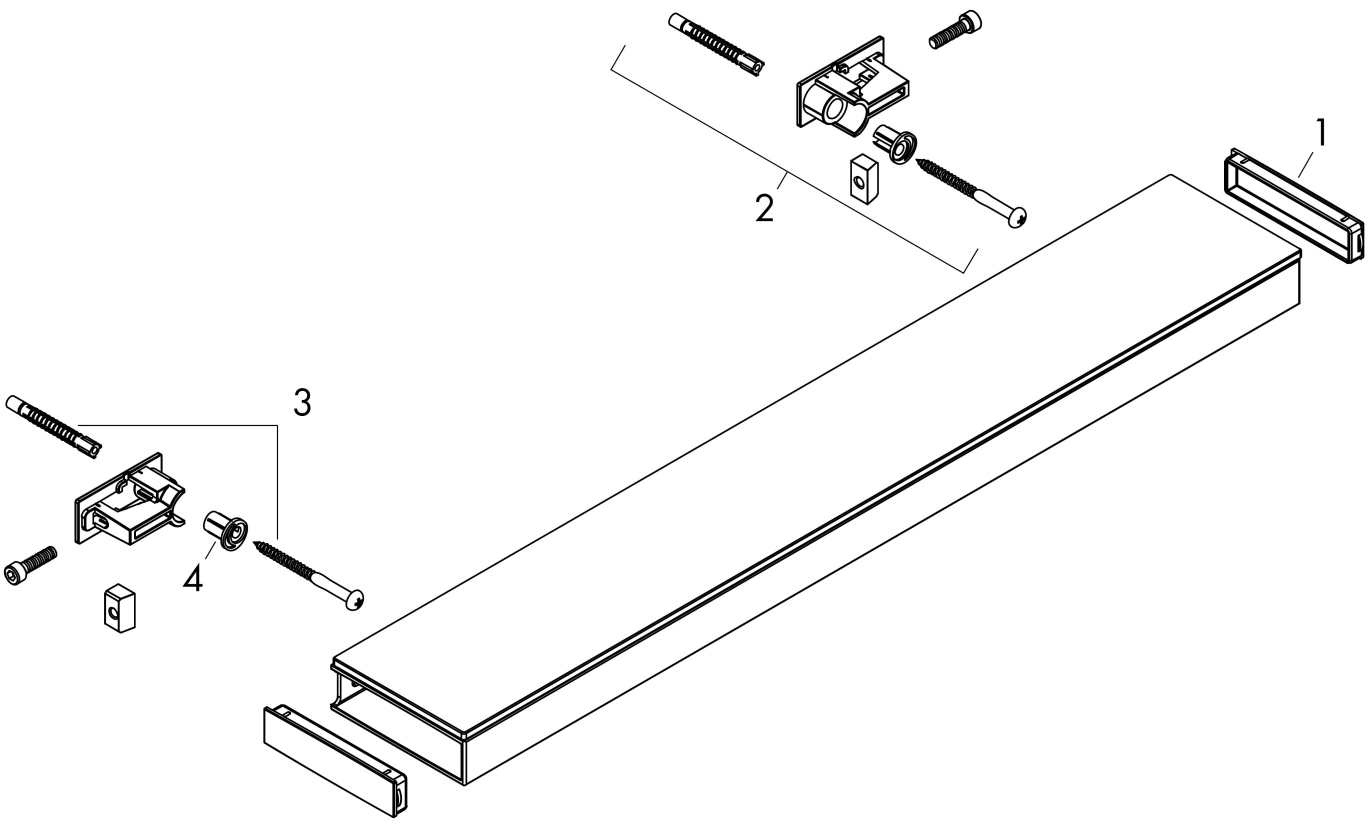

Brand	hansgrohe
Art. Name	**Rainfinity** Shelf 500
Art. Nr.	26844700
Surface	Matt White

Spare parts list for build year: > 07/19

Pos.	Description	Articlenumber
1	cover	93516000
2	support cpl.	93515000
3	mounting set	96179000
4	excentric socket	97604000