Brand	hansgrohe
Art. Name	**Rainfinity** Showerpipe 360 1jet for concealed installation
Art. Nr.	26842000
Surface	Chrome

reddot award 2019
best of the best

GOLD AWARD 2019

INNOVATIVE ARCHITECTURE
best of best

Product picture

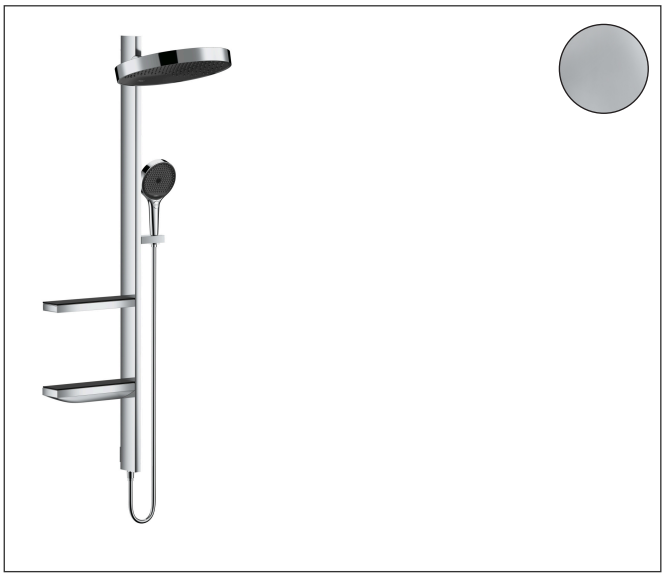

Drawing

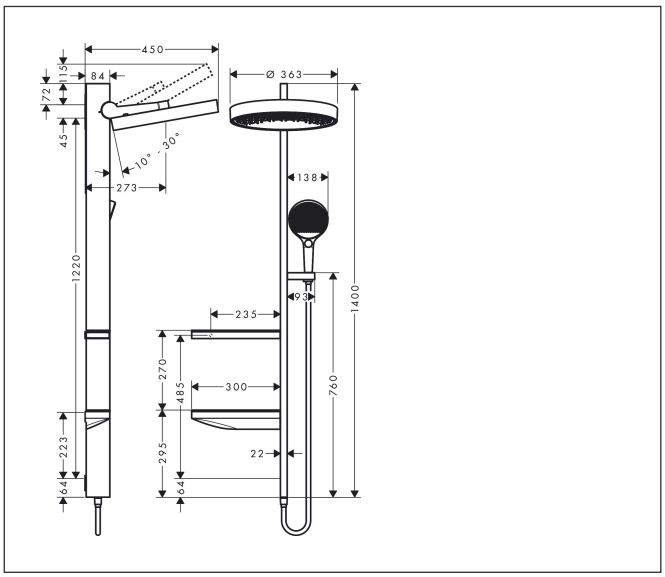

Features

- consists of: overhead shower, hand shower, shower holder, shower hose, 2 glass shelves, shower bar
- overhead shower Rainfinity 360 1jet
- shower head size overhead shower: 360 mm
- spray type overhead shower: PowderRain
- spray disc surface: graphite
- requires a mixer for 2 functions
- spray type hand shower: MonoRain, PowderRain, Intense PowderRain
- maximum flow rate of hand shower at 3 bar: 11,2 l/min
- function from: 15,8 l/min
- maximum flow rate for Showerpipe at 3 bar: 19,6 l/min
- minimum flow pressure: 2,4 bar
- max. operating pressure: 6 bar
- shower holder inclination angle can be adjusted continously, shower arm vertically inclinable by 10-30°
- shelf made of safety glass
- surface shelf: mirror glass
- mounting type: concealed
- bar width: 22 mm
- isolated water conduction
- water connection: in the lower shelf, covert
- connection dimension: DN15
- connection thread: G ½
- QuickClean: limescale deposits can simply be rubbed off with

Technology

Select

XXL Performance

Quick Clean

Spray Types

Intense Powder Rain

Mono Rain

Powder Rain

Brand	hansgrohe
Art. Name	**Rainfinity** Showerpipe 360 1jet for concealed installation
Art. Nr.	26842000
Surface	Chrome

Flow chart

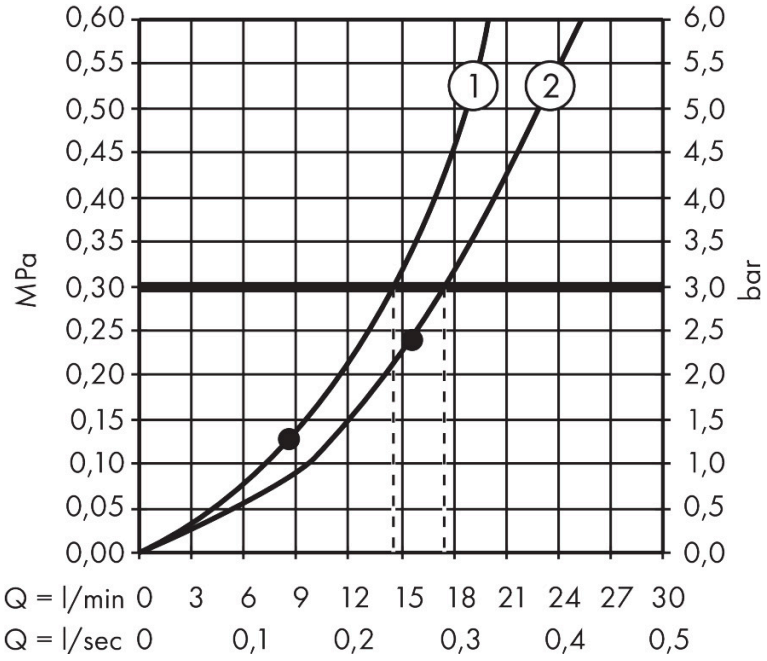

1 Hand shower
2 Overhead shower

Brand	hansgrohe
Art. Name	**Rainfinity** Showerpipe 360 1jet for concealed installation
Art. Nr.	26842000
Surface	Chrome

reddot award 2019
best of the best

GOLD AWARD 2019

INNOVATIVE ARCHITECTURE
best of best

Installation examples

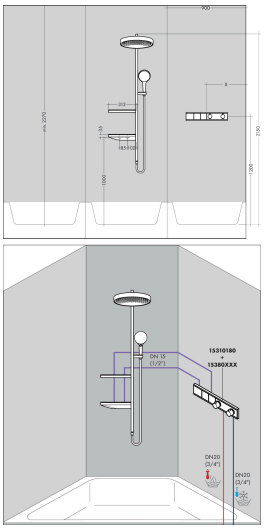

Dimensions may vary due to ceramic tolerances related to the production process.

Brand	hansgrohe
Art. Name	**Rainfinity** Showerpipe 360 1jet for concealed installation
Art. Nr.	26842000
Surface	Chrome

Spare Parts Drawing for build year: > 10/19

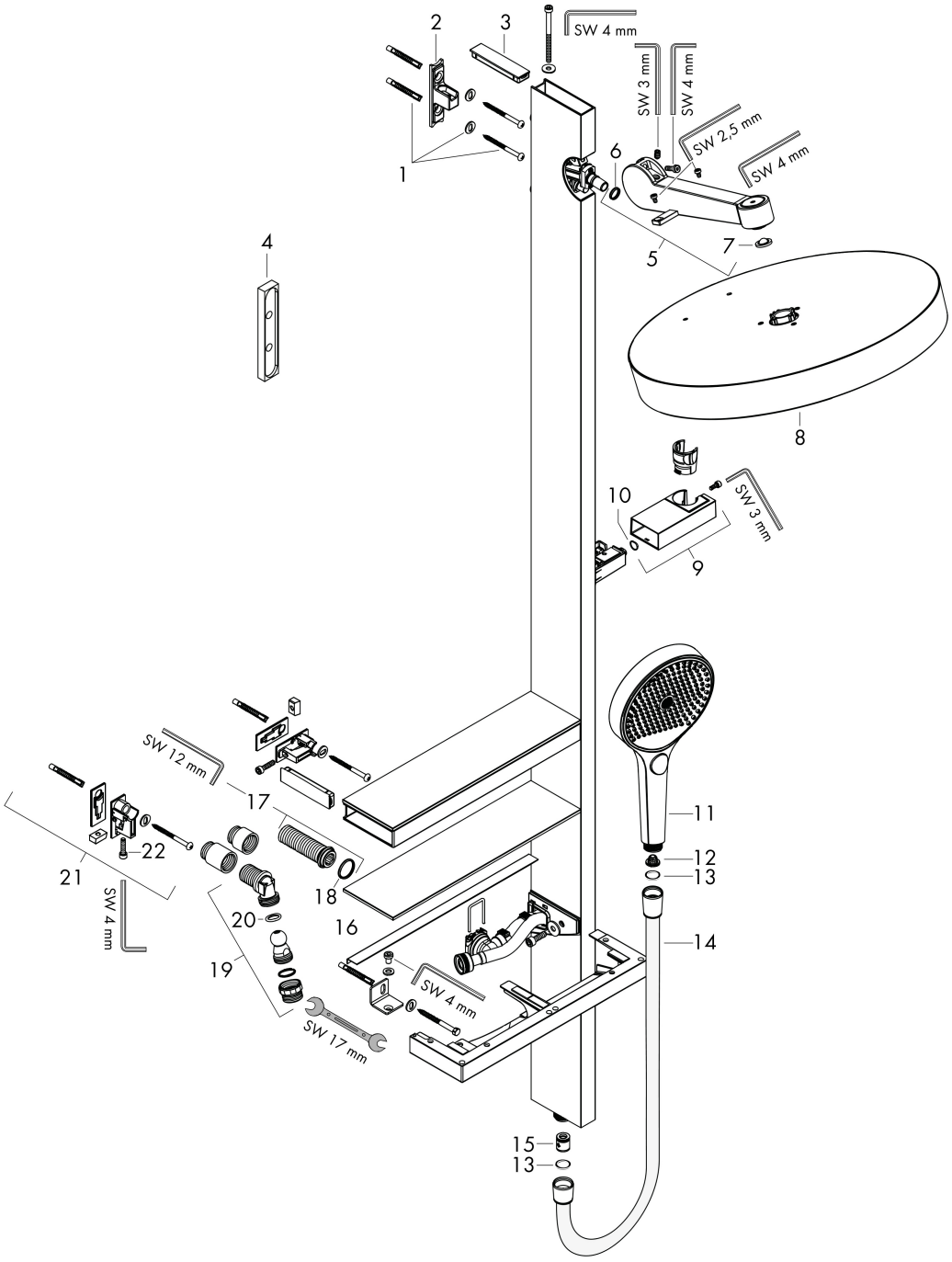

Brand	hansgrohe
Art. Name	**Rainfinity** Showerpipe 360 1jet for concealed installation
Art. Nr.	26842000
Surface	Chrome

Spare parts list for build year: > 10/19

Pos.	Description	Articlenumber
1	mounting set	96179000
2	support element	93787000
3	cover	93516000
4	tile-matching-disk 7 mm	93773000
5	shower arm	93788000
6	O-ring 11x2	98127000
7	filter packing	93774000
8	head shower	93789000
9	shower holder	93790000
10	O-ring 9x1	98213000
11	handshower	26864000
12	filter	92672000
13	seal	98058000
14	shower hose Isiflex'B 1,60 m	28276000
15	set of non return valves DW 15	94074000
16	shelf	93791000
17	connecting thread G½	93793000
18	O-ring 18x2,2	98401000
19	hose connection angel	93792000
20	O-ring 13x2,5	98428000
21	support cpl.	93515000
22	set of screws	96525000
a	concealed item	26840180
b	mounting kit	85106000