Brand	hansgrohe
Art. Name	**Croma Select E** Overhead shower 180 2jet EcoSmart
Art. Nr.	26528000
Surface	Chrome

Product picture



Drawing

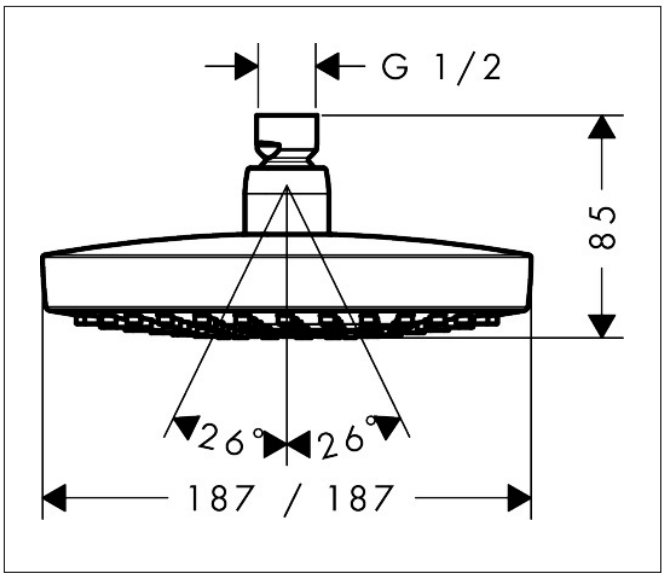

Features

- shower head size: 187 x 187 mm
- spray type: Rain, IntenseRain
- QuickClean: limescale deposits can simply be rubbed off with your finger
- flow rate Rain spray at 3 bar: 9 l/min
- flow rate IntenseRain spray at 3 bar: 9 l/min
- function from: 5,4 l/min
- maximum flow rate at 3 bar: 9 l/min
- minimum flow pressure: 1 bar
- select button on overhead shower
- overhead shower angle adjustable
- material spray disc: plastic
- spray disc removable for cleaning
- installation: ceiling or wall
- connection thread: G ½
- connection dimension: DN15
- suitable for continous flow water heaters

Technology



Spray Types



Brand	hansgrohe
Art. Name	**Croma Select E** Overhead shower 180 2jet EcoSmart
Art. Nr.	26528000
Surface	Chrome

Required parts (choose one)

Product picture	Art. Name	Art. Nr.
	hansgrohe Shower arm E 38.9 cm	27446000
	hansgrohe Ceiling connector E 10 cm	27467000
	hansgrohe Ceiling connector E 30 cm	27388000

Brand	hansgrohe
Art. Name	**Croma Select E** Overhead shower 180 2jet EcoSmart
Art. Nr.	26528000
Surface	Chrome

Flow chart

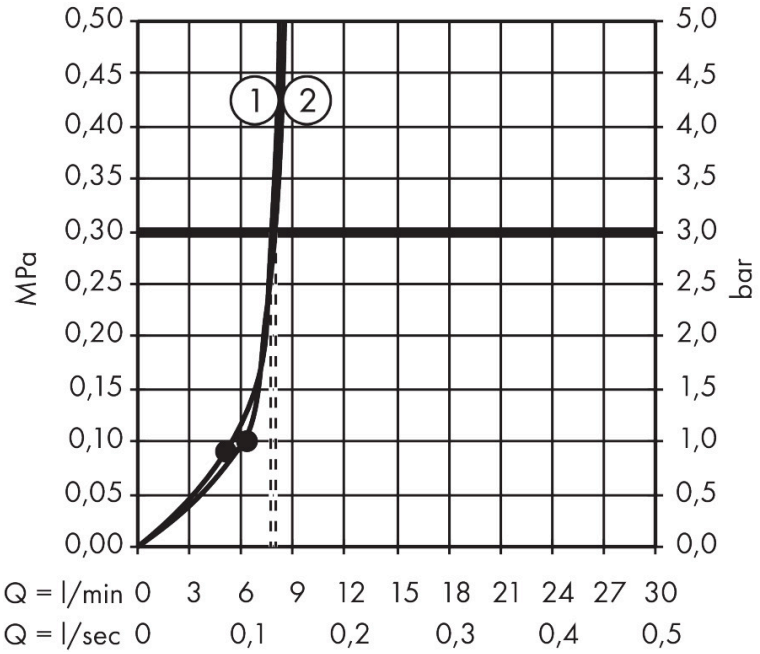

1 Rain
2 IntenseRain
3 Rain + Booster

The consumption was measured in combination with the appropriate fittings (thermostat/mixer/in-wall valve) to reflect actual application in practice.

Brand	hansgrohe
Art. Name	**Croma Select E** Overhead shower 180 2jet EcoSmart
Art. Nr.	26528000
Surface	Chrome

Spare Parts Drawing for build year: > 02/18

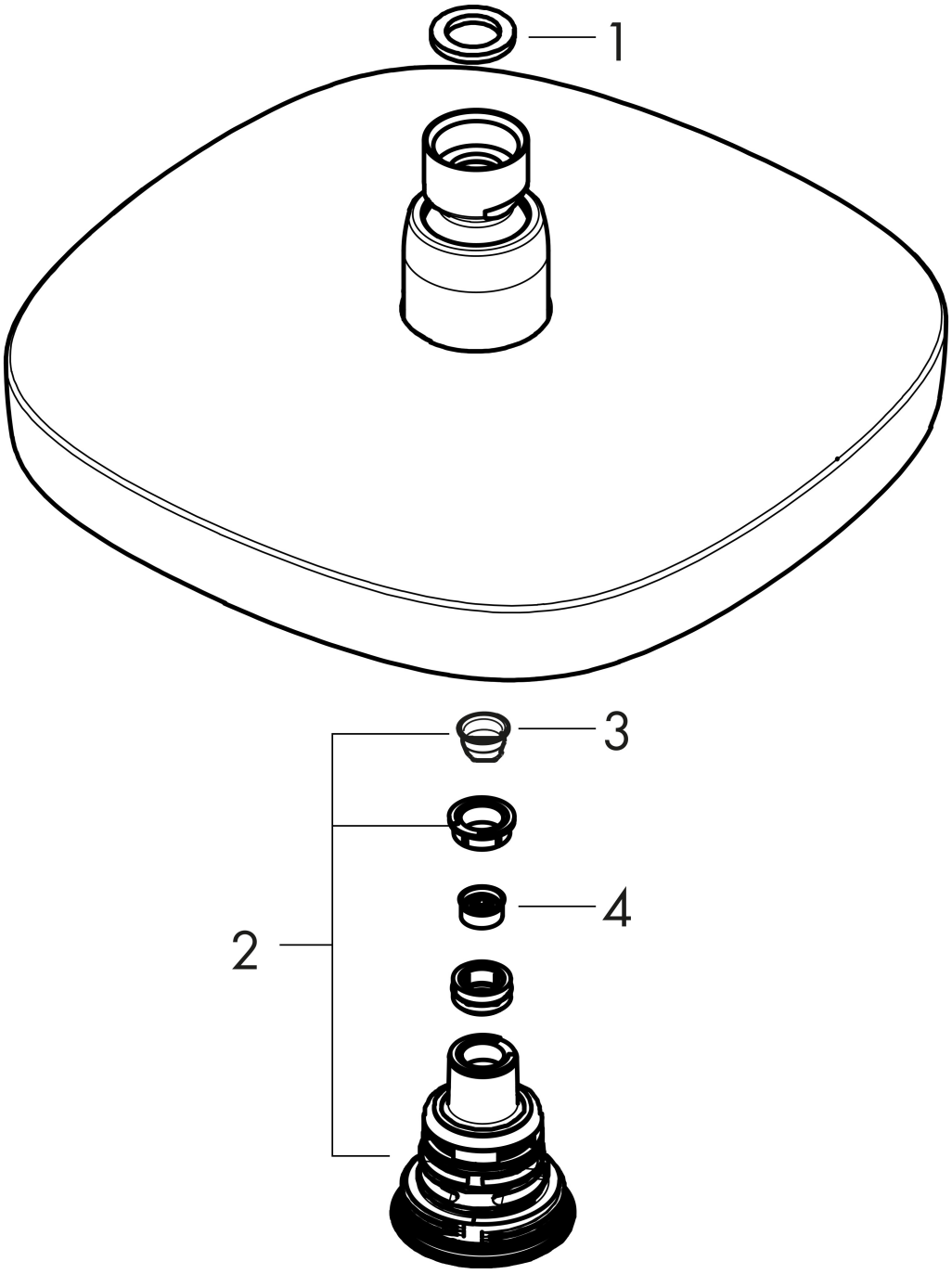

Brand	hansgrohe
Art. Name	**Croma Select E** Overhead shower 180 2jet EcoSmart
Art. Nr.	26528000
Surface	Chrome

Spare parts list for build year: > 02/18

Pos.	Description	Articlenumber
1	seal	98058000
2	selector assy	98343001
3	filter	97735000
4	flow limiter (9 l/min)	95659000