Brand	hansgrohe
Art. Name	**Crometta** Hand shower 100 Vario EcoSmart
Art. Nr.	26332400
Surface	White/Chrome

Product picture



Drawing

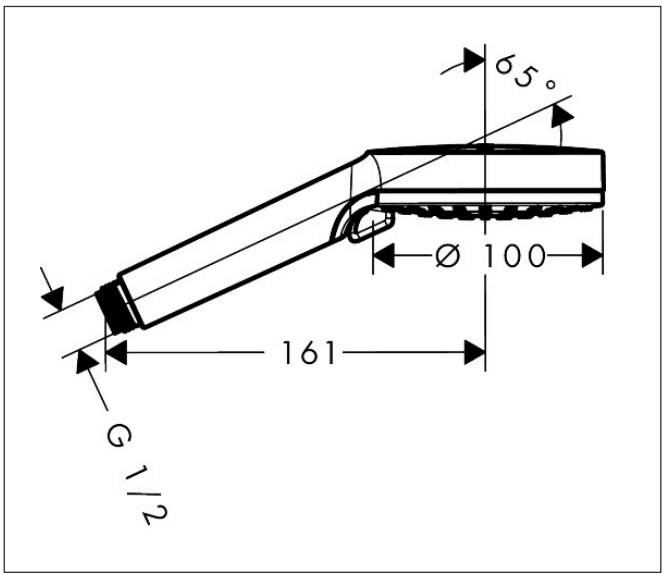

Features

- shower head size: 100 mm
- spray type: Rain, IntenseRain
- spray type adjustment by turning spray disc
- spray disc surface: easy cleanable plastic spray disc
- QuickClean: limescale deposits can simply be rubbed off with your finger
- flow rate Rain spray at 3 bar: 6,7 l/min
- flow rate IntenseRain spray at 3 bar: 6,3 l/min
- function from: 5 l/min
- maximum flow rate at 3 bar: 6,7 l/min
- minimum flow pressure: 1 bar
- with internal water supply
- rinseable dirt filter
- connection thread: G ½
- suitable for continous flow water heaters
- EU taxonomy: max. 8 l/min - Do No Significant Harm (DNSH)

Technology

XXL Performance

EcoSmart

Quick Clean

Spray Types

Intense Rain

Rain

Brand	hansgrohe
Art. Name	**Crometta** Hand shower 100 Vario EcoSmart
Art. Nr.	26332400
Surface	White/Chrome

Flow chart

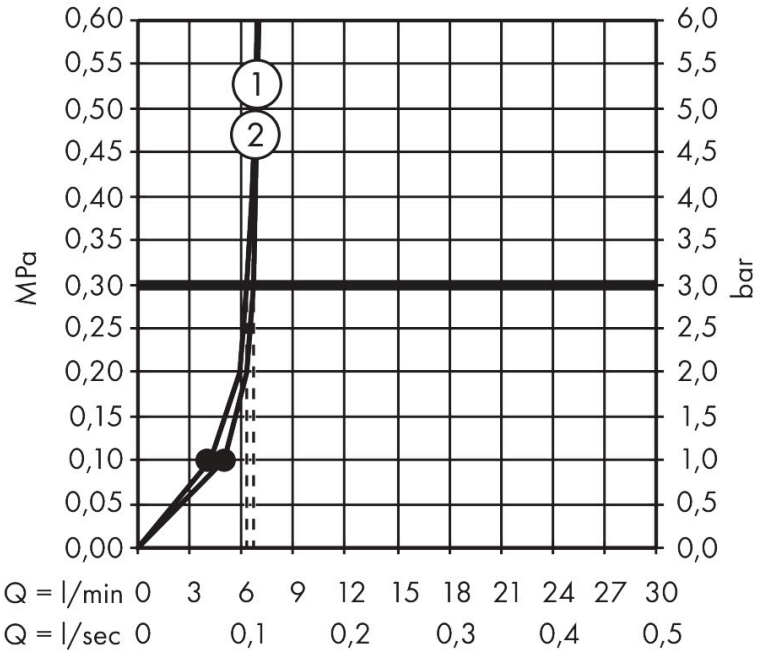

1 Rain
2 IntenseRain
3 Rain + Booster

The consumption was measured in combination with the appropriate fittings (thermostat/mixer/in-wall valve) to reflect actual application in practice.

Brand	hansgrohe
Art. Name	**Crometta** Hand shower 100 Vario EcoSmart
Art. Nr.	26332400
Surface	White/Chrome

Spare Parts Drawing for build year: > 04/16

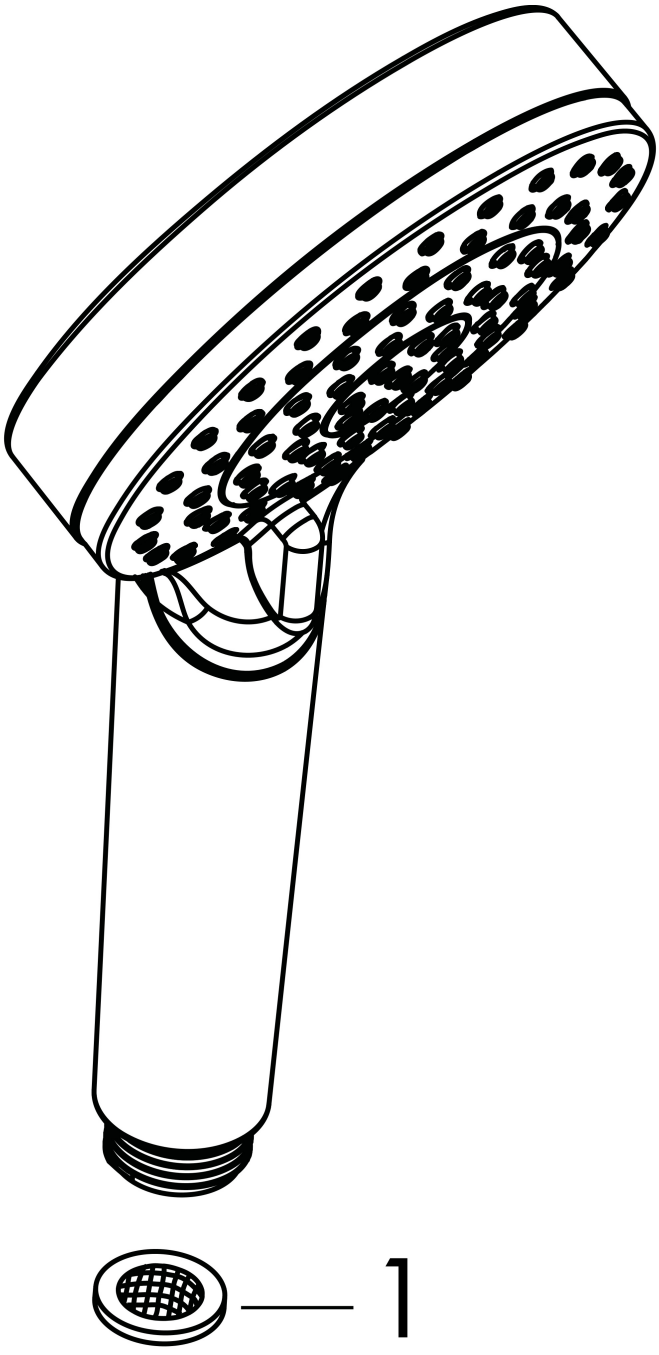

Brand	hansgrohe
Art. Name	**Crometta** Hand shower 100 Vario EcoSmart
Art. Nr.	26332400
Surface	White/Chrome

Spare parts list for build year: > 04/16

Pos.	Description	Articlenumber
1	filter packing	94246000