Brand	hansgrohe
Art. Name	**Raindance E** Overhead shower 300 1jet with ceiling connector
Art. Nr.	26250700
Surface	Matt White

Product picture



Drawing

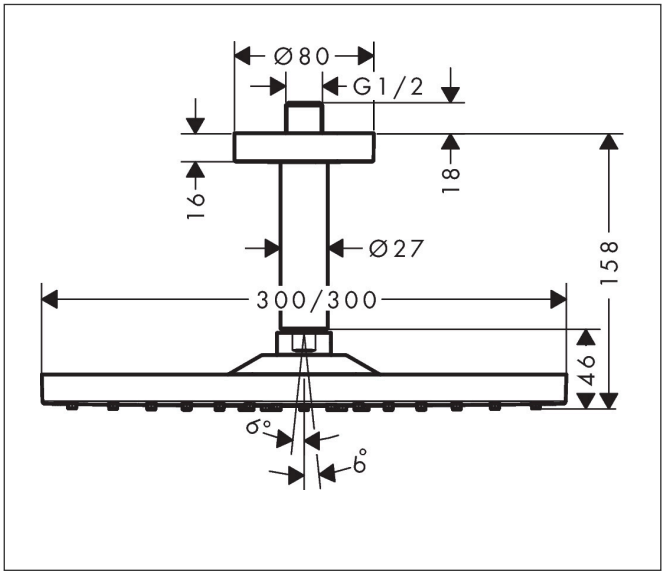

Features

- consists of: overhead shower, ceiling connector
- shower head size: 300 x 300 mm
- spray type: RainAir
- QuickClean: limescale deposits can simply be rubbed off with your finger
- flow rate RainAir spray at 3 bar: 17 l/min
- function from: 12,3 l/min
- maximum flow rate at 3 bar: 17 l/min
- minimum flow pressure: 1,4 bar
- overhead shower angle adjustable
- material spray disc: metal
- spray disc removable for cleaning
- metal ceilling connector
- ceiling connection length: 158 mm
- installation: ceiling
- connection thread: G ½
- connection dimension: DN15
- suitable for continous flow water heaters

Technology

XXL Performance

AirPower

Quick Clean

Spray Types

Rain Air

Brand	hansgrohe
Art. Name	**Raindance E** Overhead shower 300 1jet with ceiling connector
Art. Nr.	26250700
Surface	Matt White

Flow chart

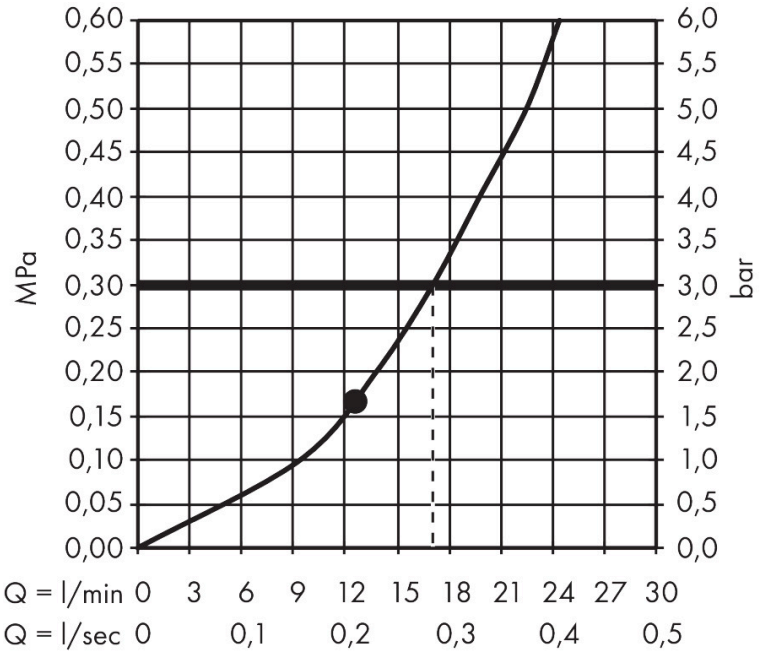

The consumption was measured in combination with the appropriate fittings (thermostat/mixer/in-wall valve) to reflect actual application in practice.

Brand	hansgrohe
Art. Name	**Raindance E** Overhead shower 300 1jet with ceiling connector
Art. Nr.	26250700
Surface	Matt White

Spare Parts Drawing for build year: > 07/19

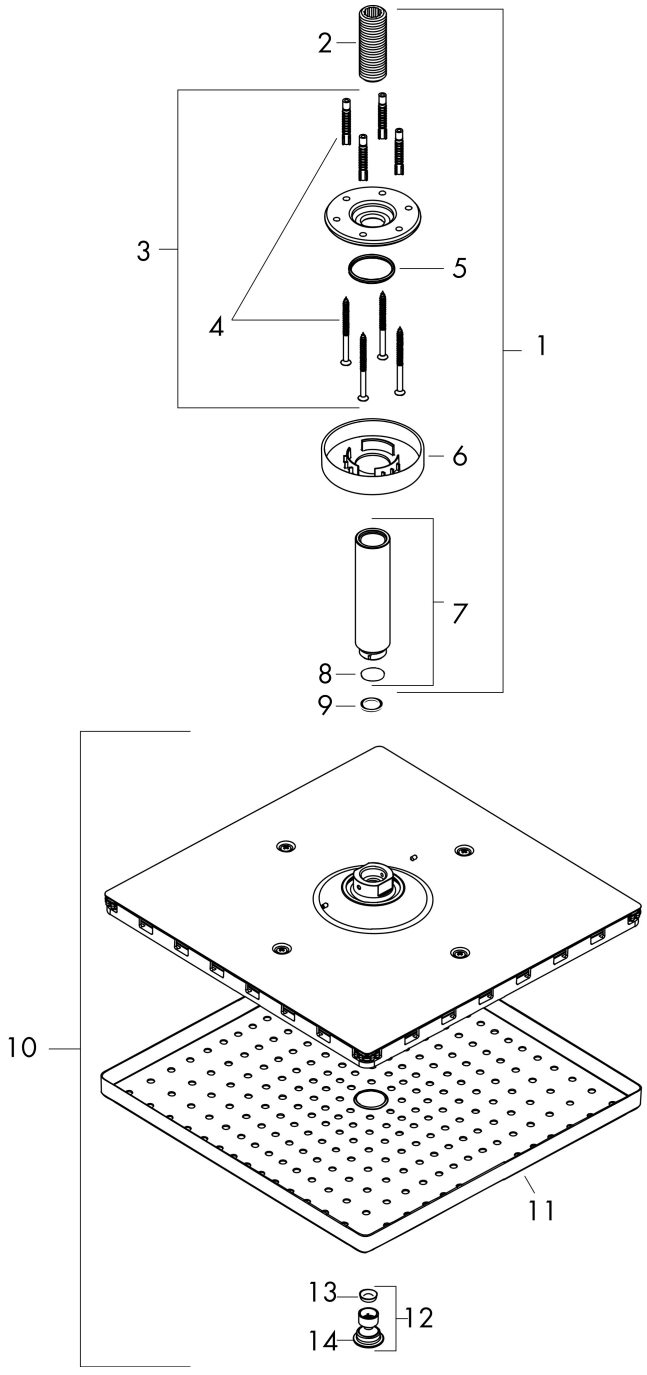

Brand	hansgrohe
Art. Name	**Raindance E** Overhead shower 300 1jet with ceiling connector
Art. Nr.	26250700
Surface	Matt White

Spare parts list for build year: > 07/19

Pos.	Description	Articlenumber
1	shower arm	27393700
2	connecting thread	95188000
3	mounting kit	95208000
4	mounting set	40916000
5	O-ring 34x2	98383000
6	escutcheon Ø 80 mm	92122700
7		
8	O-ring 16x2	98133000
9	seal	98058000
10	head shower	93230700
11	spray body	94580700
12	air jet	93127700
13	filter	93128000
14	O-ring 15x2	98163000