Brand	hansgrohe
Art. Name	**Rainfinity** Overhead shower 360 3jet with wall connector
Art. Nr.	26234700
Surface	Matt White

Product picture



Drawing

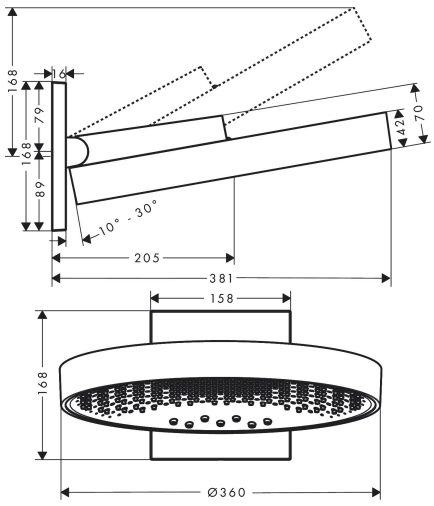

Features

- consists of: overhead shower, wall outlet
- shower head size: 360 mm
- spray type: PowderRain, Intense PowderRain, RainStream
- QuickClean: limescale deposits can simply be rubbed off with your finger
- flow rate PowderRain spray at 3 bar: 20 l/min
- flow rate Intense PowderRain at 3 bar: 18 l/min
- flow rate RainStream spray at 3 bar: 16 l/min
- function from: 12,2 l/min
- maximum flow rate at 3 bar: 28,1 l/min
- minimum flow pressure: 1,7 bar
- projection: 381 mm
- middle spray disc: 205 mm
- frame: metal
- material spray disc: aluminium
- spray disc surface: graphite
- overhead shower removable for cleaning
- shower head vertically inclinable by 10-30°
- the 3 spray zones must be controlled via 3 valves or a diverter valve with 3 outlets
- installation: wall-mounted - based on iBox
- connection dimension: DN15
- not suitable for continuous flow water heaters

Technology

XXL Performance

Quick Clean

Spray Types

Rain Stream

Intense Powder Rain

Powder Rain

Brand	hansgrohe
Art. Name	**Rainfinity** Overhead shower 360 3jet with wall connector
Art. Nr.	26234700
Surface	Matt White

Required parts

Product picture	Art. Name	Art. Nr.
	hansgrohe Basic set	01500180
	hansgrohe Adapter plate for iBox universal 2	13588000

Brand	hansgrohe
Art. Name	**Rainfinity** Overhead shower 360 3jet with wall connector
Art. Nr.	26234700
Surface	Matt White

Flow chart

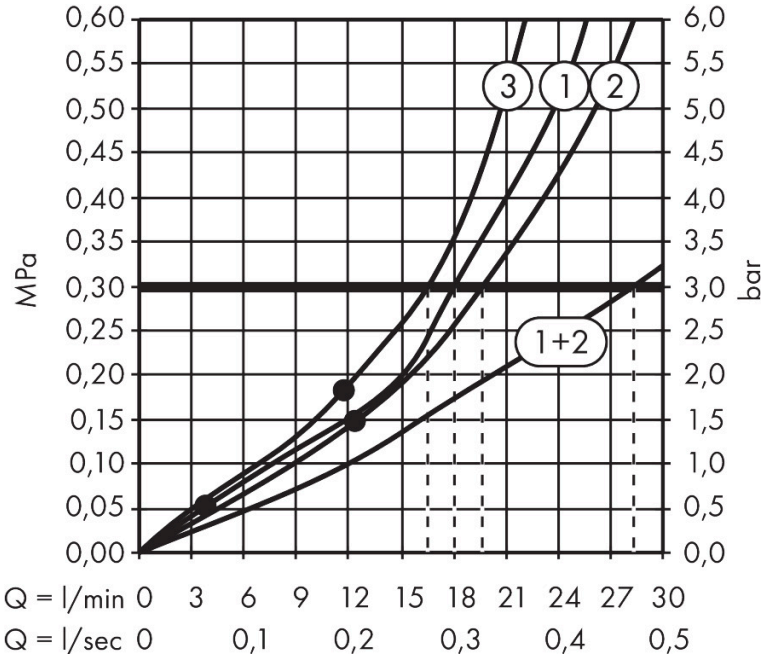

1 RainStream
2 PowderRain
3 Intense PowderRain

The consumption was measured in combination with the appropriate fittings (thermostat/mixer/in-wall valve) to reflect actual application in practice.

Brand	hansgrohe
Art. Name	**Rainfinity** Overhead shower 360 3jet with wall connector
Art. Nr.	26234700
Surface	Matt White

Installation examples

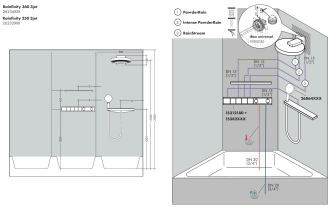

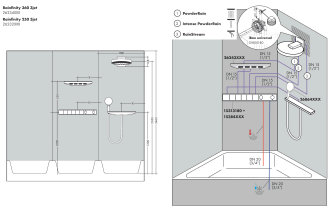

Dimensions may vary due to ceramic tolerances related to the production process.

Brand	hansgrohe
Art. Name	**Rainfinity** Overhead shower 360 3jet with wall connector
Art. Nr.	26234700
Surface	Matt White

Spare Parts Drawing for build year: > 07/19

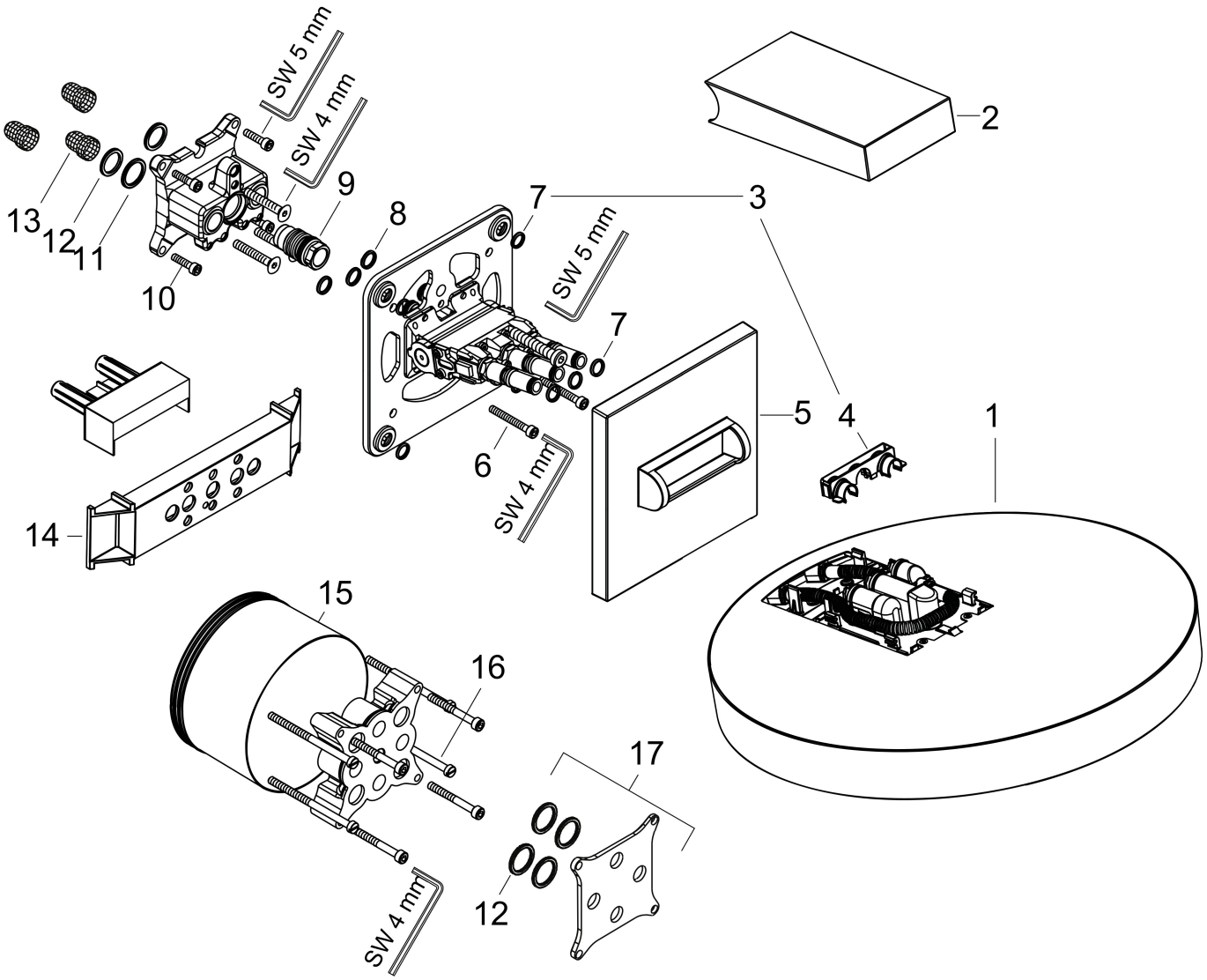

Brand	hansgrohe
Art. Name	**Rainfinity** Overhead shower 360 3jet with wall connector
Art. Nr.	26234700
Surface	Matt White

Spare parts list for build year: > 07/19

Pos.	Description	Articlenumber
1	head shower	93669700
2	cover	93524700
3	installation unit cpl.	94678000
4	cramp	93525000
5	escutcheon	93523700
6	hexagon socket screw M5x40	97673000
7	O-ring 9x2	98119000
8	O-ring 10x2	98170000
9	O-ring 17x2	98199000
10	set of screws	96525000
11	O-ring 18x2	98181000
12	O-ring 16x2	98133000
13	filter	98513000
14	fit-up aid	92540000
15	extension 25 mm	13595000
16	set of fixing screws	97747000
17	compensation set 1°	95521000
a	concealed item	01800180