Brand	hansgrohe
Art. Name	**Rainfinity** Overhead shower 360 1jet
Art. Nr.	26231140
Surface	Brushed Bronze

Product picture

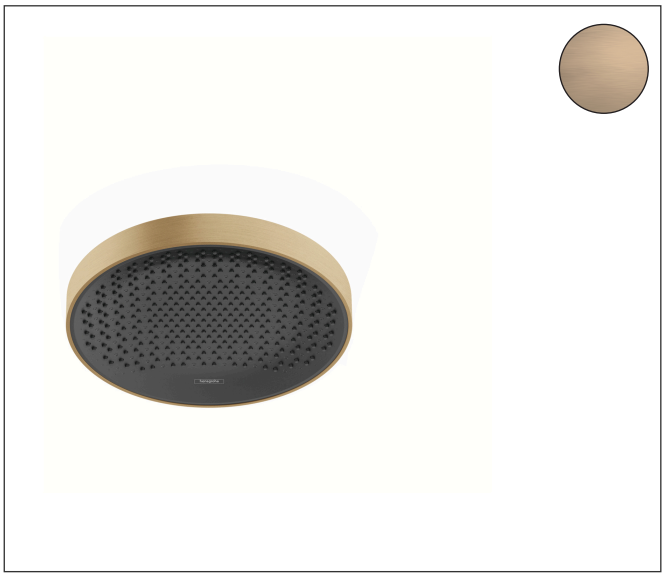

Drawing

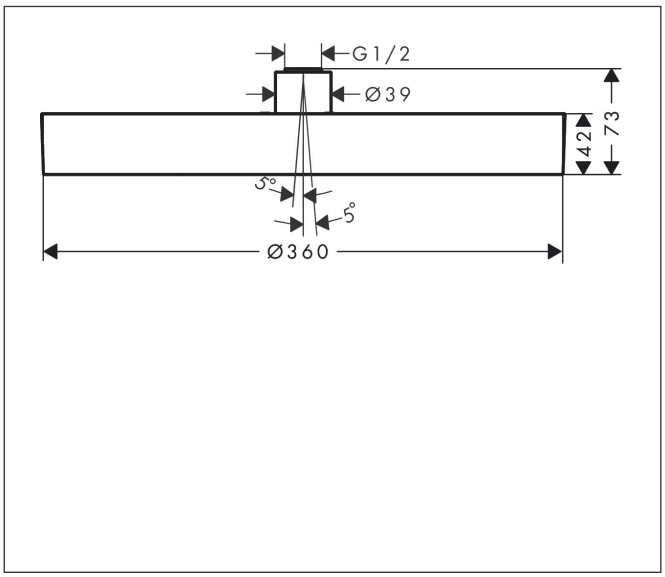

Features

- shower head size: 360 mm
- spray type: PowderRain
- QuickClean: limescale deposits can simply be rubbed off with your finger
- flow rate PowderRain spray at 3 bar: 20,3 l/min
- function from: 17,3 l/min
- maximum flow rate at 3 bar: 20,3 l/min
- minimum flow pressure: 2 bar
- overhead shower angle (2 x 5°) adjustable
- frame: metal
- material spray disc: aluminium
- spray disc surface: graphite
- overhead shower removable for cleaning
- installation: ceiling or wall
- connection thread: G ½
- connection dimension: DN15
- not suitable for continuous flow water heaters

Technology

XXL Performance

Quick Clean

Spray Types

Powder Rain

Brand	hansgrohe
Art. Name	**Rainfinity** Overhead shower 360 1jet
Art. Nr.	26231140
Surface	Brushed Bronze

Required parts (choose one)

Product picture	Art. Name	Art. Nr.
	hansgrohe Ceiling connector S 10 cm	27393140
	hansgrohe Ceiling connector S 30 cm	27389140
	hansgrohe Shower arm E 39 cm with rectangular shaft	27694140

Brand	hansgrohe
Art. Name	**Rainfinity** Overhead shower 360 1jet
Art. Nr.	26231140
Surface	Brushed Bronze

Flow chart

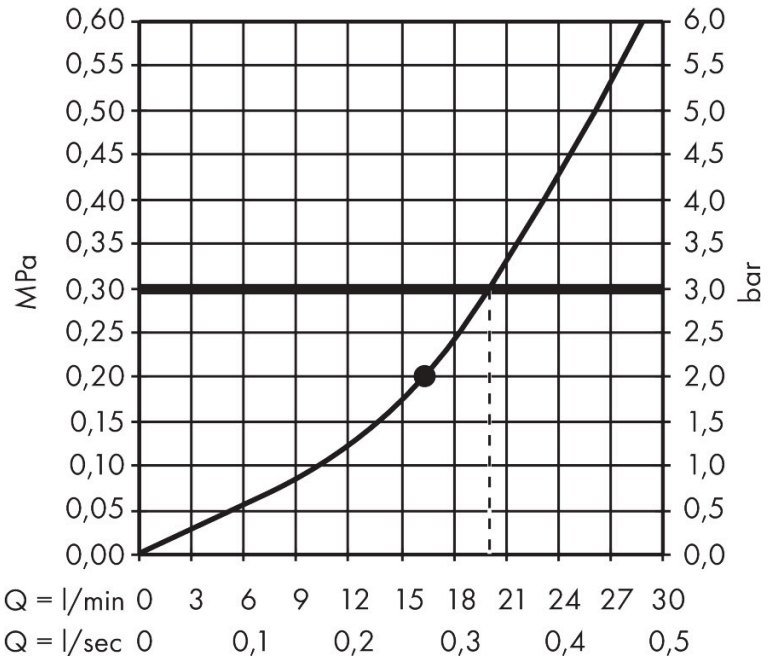

The consumption was measured in combination with the appropriate fittings (thermostat/mixer/in-wall valve) to reflect actual application in practice.

Brand	hansgrohe
Art. Name	**Rainfinity** Overhead shower 360 1jet
Art. Nr.	26231140
Surface	Brushed Bronze

Spare Parts Drawing for build year: > 04/21

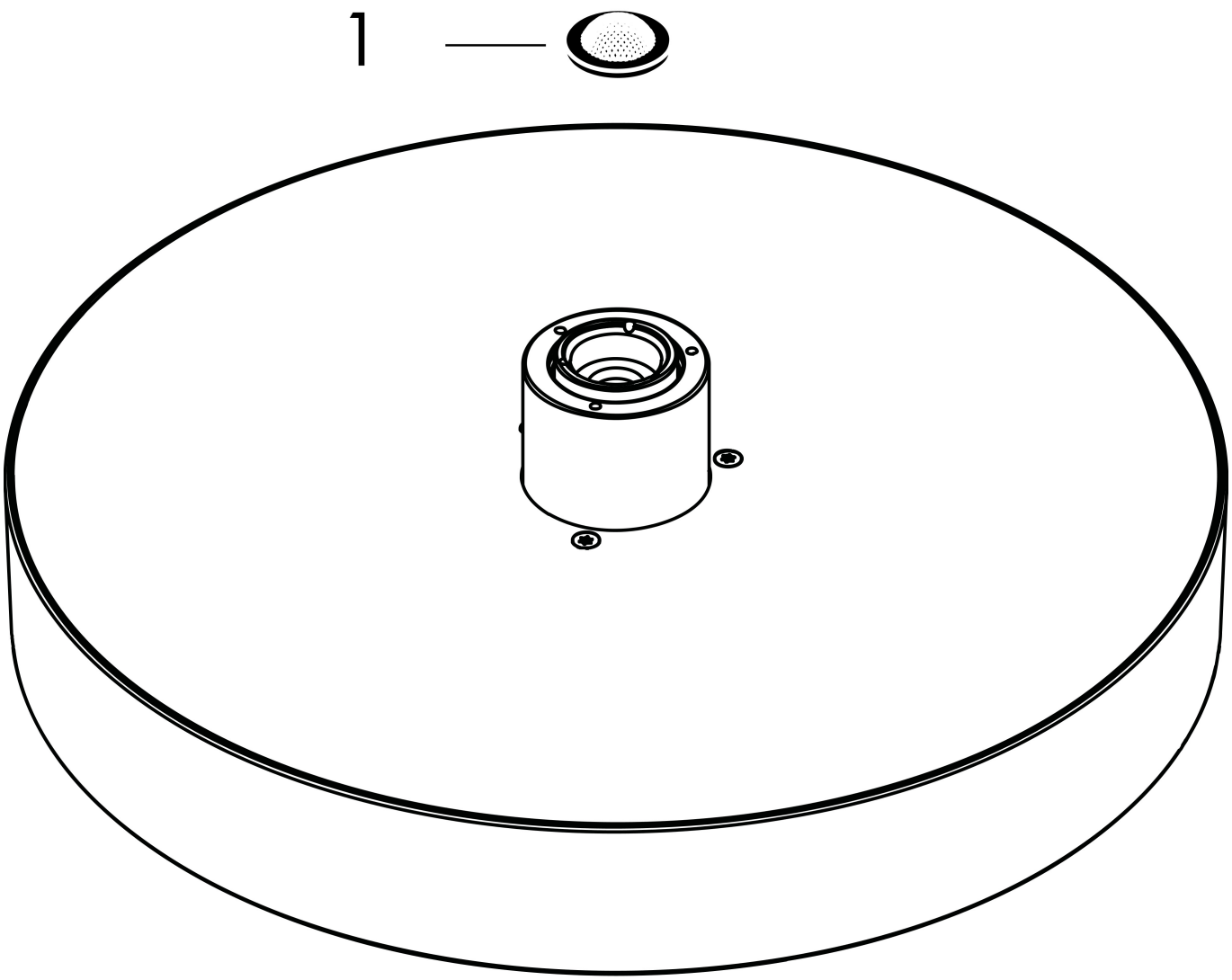

Brand	hansgrohe
Art. Name	**Rainfinity** Overhead shower 360 1jet
Art. Nr.	26231140
Surface	Brushed Bronze

Spare parts list for build year: > 04/21

Pos.	Description	Articlenumber
1	filter packing	94246000