Brand	hansgrohe
Art. Name	**Rainfinity** Overhead shower 360 1jet with wall connector
Art. Nr.	26230700
Surface	Matt White

reddot award 2019
best of the best

GOLD AWARD 2019

INNOVATIVE ARCHITECTURE best of best

GERMAN DESIGN AWARD WINNER 2020

Product picture



Drawing

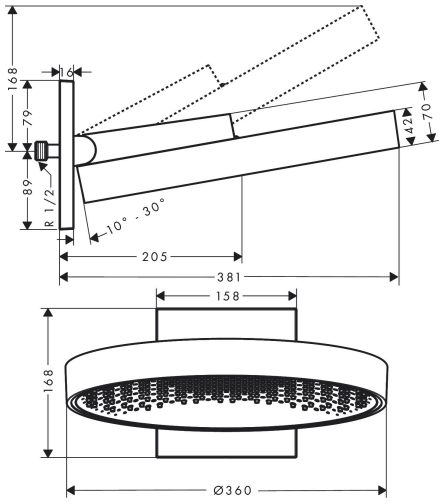

Features

- consists of: overhead shower, wall outlet
- shower head size: 360 mm
- spray type: PowderRain
- QuickClean: limescale deposits can simply be rubbed off with your finger
- flow rate PowderRain spray at 3 bar: 21 l/min
- function from: 16,5 l/min
- maximum flow rate at 3 bar: 21 l/min
- minimum flow pressure: 2 bar
- projection: 381 mm
- middle spray disc: 205 mm
- frame: metal
- material spray disc: aluminium
- spray disc surface: graphite
- overhead shower removable for cleaning
- shower head vertically inclinable by 10-30°
- installation: wall
- connection thread: G ½
- connection dimension: DN15
- not suitable for continuous flow water heaters

Technology

XXL Performance

Quick Clean

Spray Types

Powder Rain

Brand	hansgrohe
Art. Name	**Rainfinity** Overhead shower 360 1jet with wall connector
Art. Nr.	26230700
Surface	Matt White

Flow chart

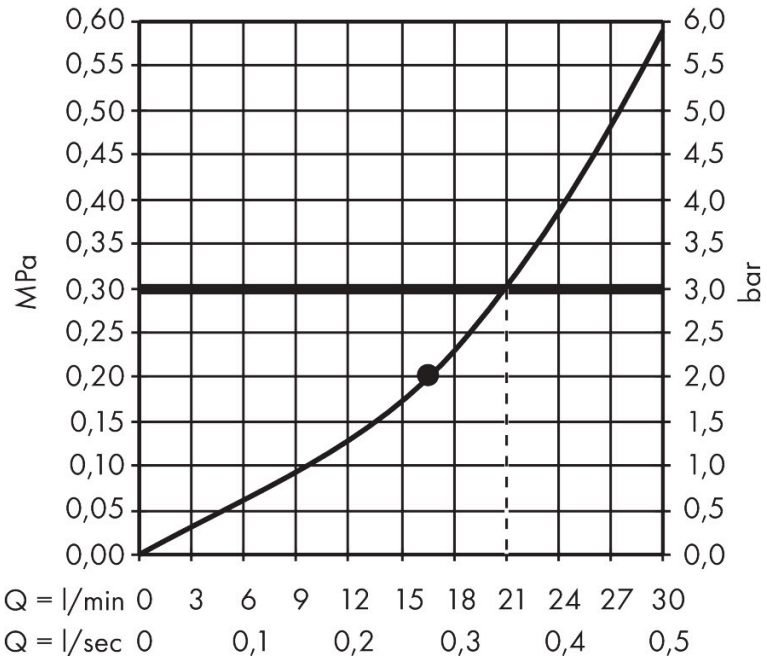

The consumption was measured in combination with the appropriate fittings (thermostat/mixer/in-wall valve) to reflect actual application in practice.

Brand	hansgrohe
Art. Name	**Rainfinity** Overhead shower 360 1jet with wall connector
Art. Nr.	26230700
Surface	Matt White

Installation examples

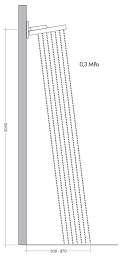

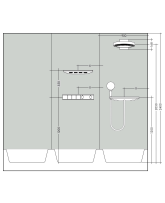

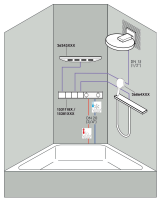

Dimensions may vary due to ceramic tolerances related to the production process.

Brand	hansgrohe
Art. Name	**Rainfinity** Overhead shower 360 1jet with wall connector
Art. Nr.	26230700
Surface	Matt White

Spare Parts Drawing for build year: > 07/19

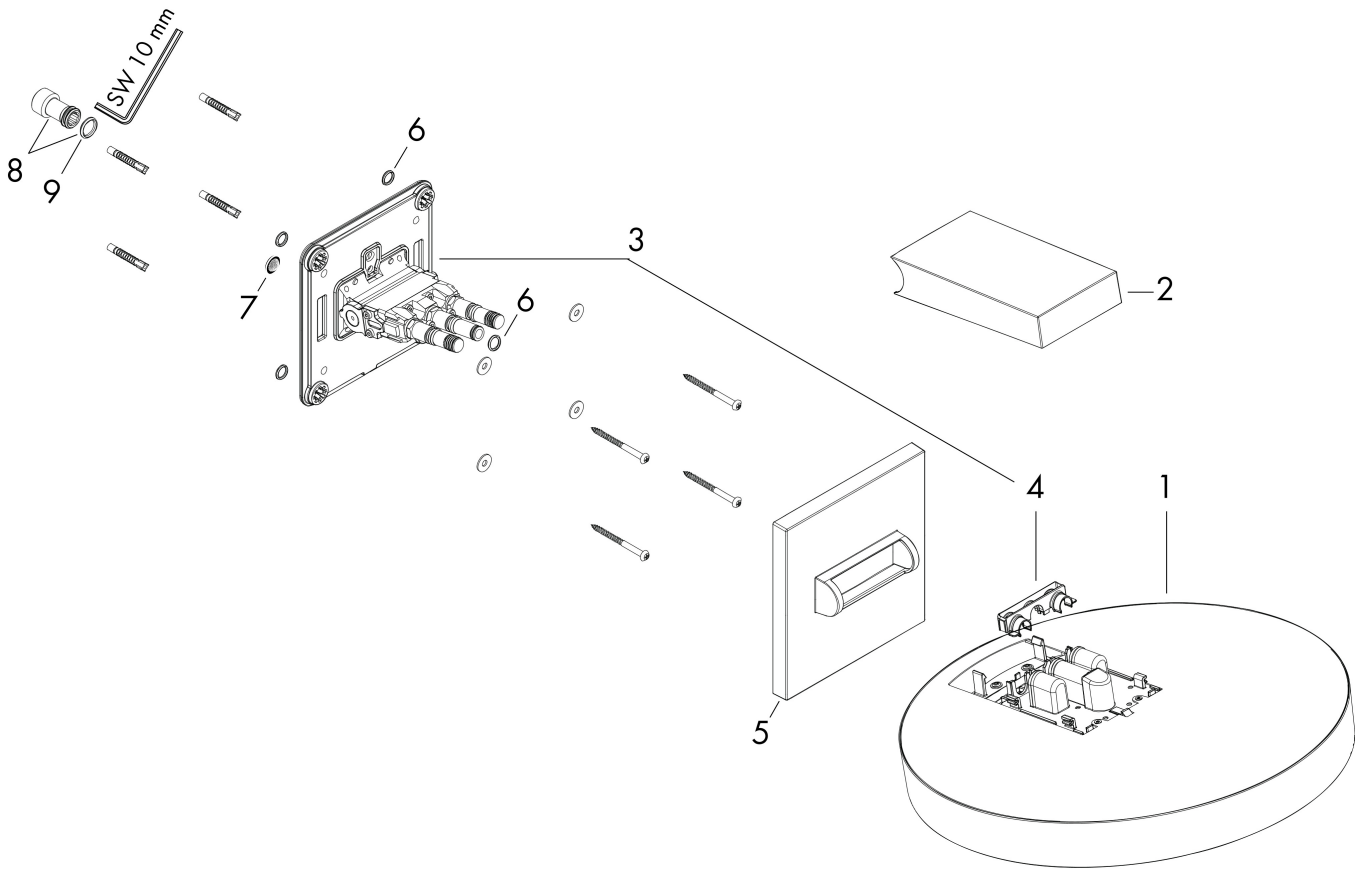

Brand	hansgrohe
Art. Name	**Rainfinity** Overhead shower 360 1jet with wall connector
Art. Nr.	26230700
Surface	Matt White

Spare parts list for build year: > 07/19

Pos.	Description	Articlenumber
1	head shower	93666700
2	cover	93524700
3	installation unit cpl.	94677000
4	cramp	93525000
5	escutcheon	93523700
6	O-ring 9x2	98119000
7	filter packing	93774000
8	connecting thread	94673000
9	O-ring 13x2,5	98428000