Brand	hansgrohe
Art. Name	**Rainfinity** Overhead shower 250 1jet EcoSmart
Art. Nr.	26229700
Surface	Matt White

reddot award 2019 best of the best

GOLD AWARD 2019

INNOVATIVE ARCHITECTURE best of best

GERMAN DESIGN AWARD WINNER 2020

Product picture

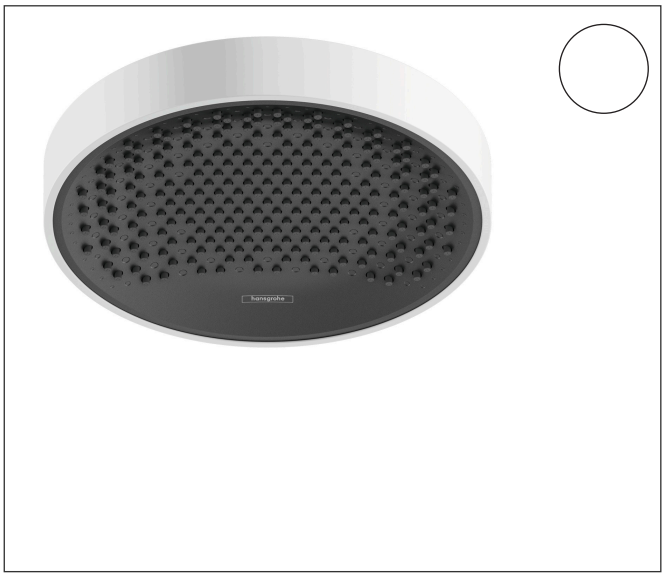

Drawing

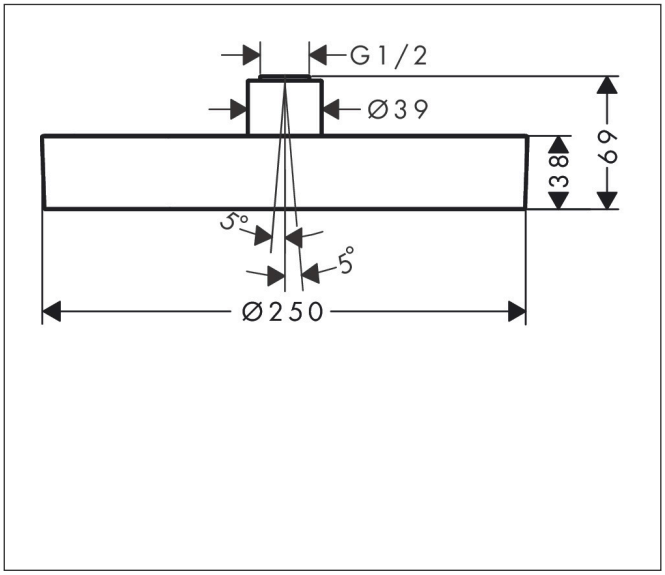

Features

- shower head size: 250 mm
- spray type: PowderRain
- FlexPower: nozzles automatically adjust to water pressure by opening and closing
- QuickClean+: reduce limescale deposits thanks to the elasticity of the nozzles
- flow rate PowderRain spray at 3 bar: 7,9 l/min
- function from: 6,5 l/min
- maximum flow rate at 3 bar: 7,9 l/min
- minimum flow pressure: 1 bar
- overhead shower angle (2 x 5°) adjustable
- frame: metal
- material spray disc: aluminium
- spray disc surface: graphite
- overhead shower removable for cleaning
- installation: ceiling or wall, Tool-free assembly and disassembly
- connection thread: G ½
- connection dimension: DN15
- suitable for continous flow water heaters
- EU taxonomy: max. 8 l/min - Do No Significant Harm (DNSH)

Technology

Quick Clean+ | Flex Power | XXL Performance | EcoSmart

Spray Types

Powder Rain

Brand	hansgrohe
Art. Name	**Rainfinity** Overhead shower 250 1jet EcoSmart
Art. Nr.	26229700
Surface	Matt White

Required parts (choose one)

Product picture	Art. Name	Art. Nr.
	hansgrohe Ceiling connector S 10 cm	27393700
	hansgrohe Shower arm E 39 cm with rectangular shaft	27694700
	hansgrohe Ceiling connector S 30 cm	27389700

Brand	hansgrohe
Art. Name	**Rainfinity** Overhead shower 250 1jet EcoSmart
Art. Nr.	26229700
Surface	Matt White

Flow chart

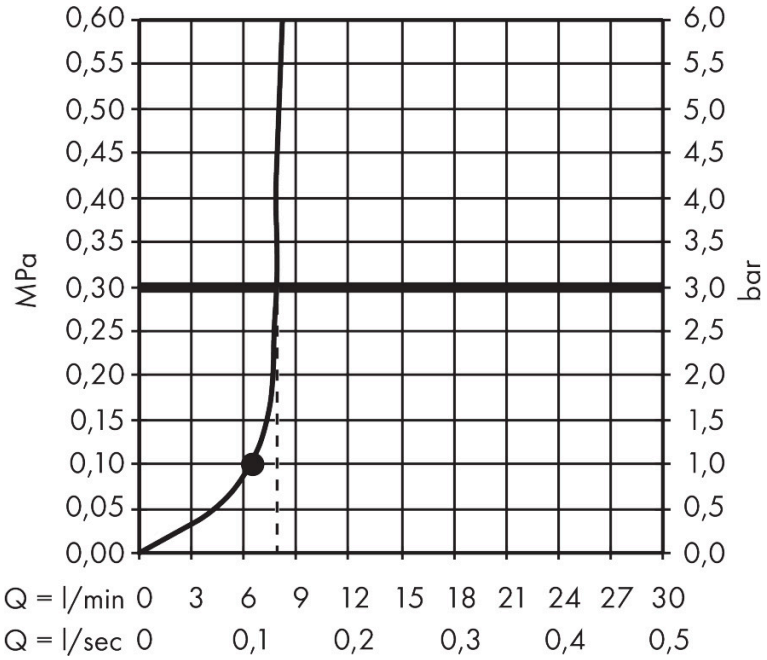

Brand	hansgrohe
Art. Name	**Rainfinity** Overhead shower 250 1jet EcoSmart
Art. Nr.	26229700
Surface	Matt White

Spare Parts Drawing for build year: > 01/21

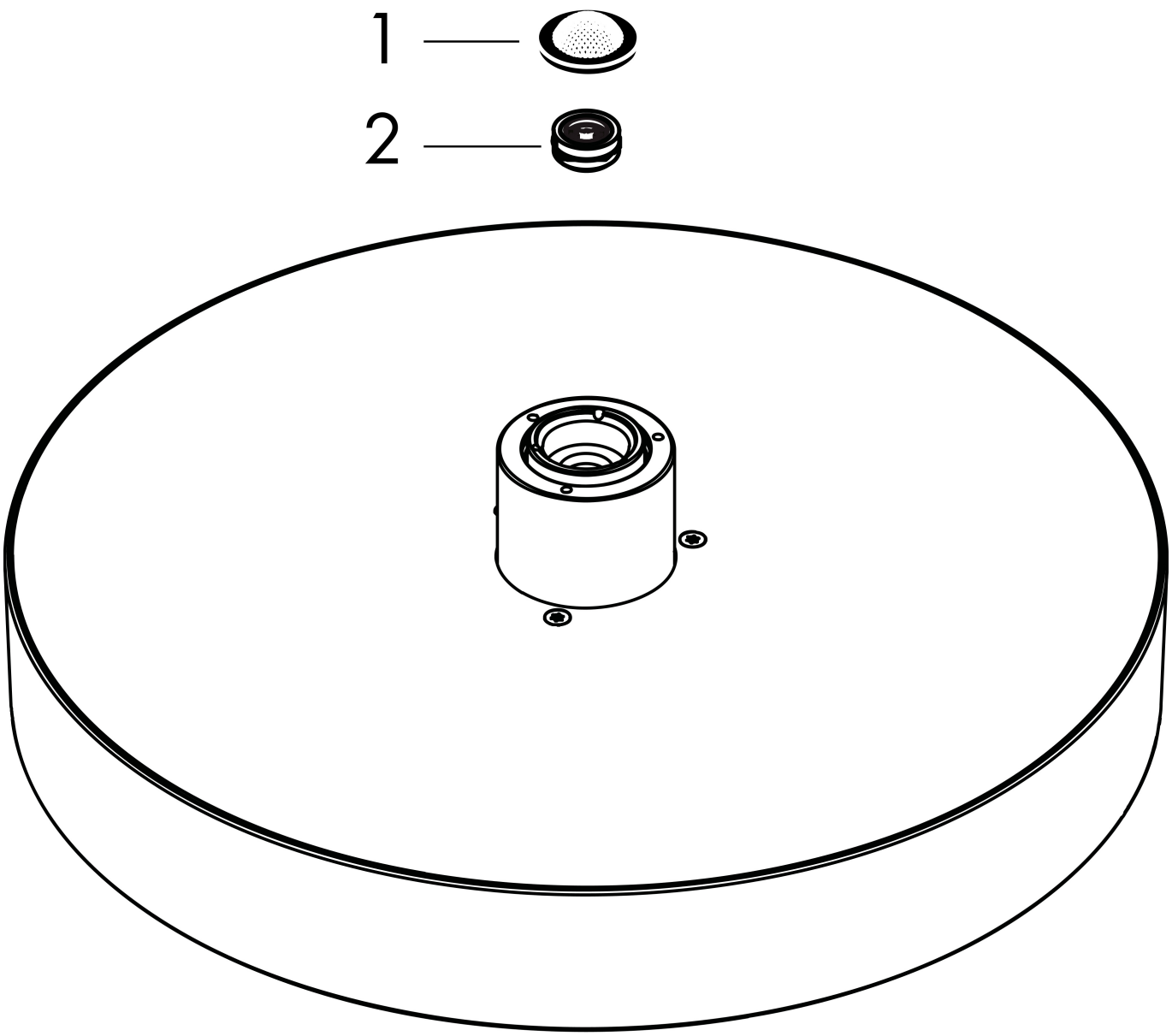

Brand	hansgrohe
Art. Name	**Rainfinity** Overhead shower 250 1jet EcoSmart
Art. Nr.	26229700
Surface	Matt White

Spare parts list for build year: > 01/21

Pos.	Description	Articlenumber
1	filter packing	93774000
2	flow limiter (9 l/min)	95659000