Brand	hansgrohe
Art. Name	**Rainfinity** Overhead shower 250 1jet EcoSmart
Art. Nr.	26229140
Surface	Brushed Bronze

Product picture

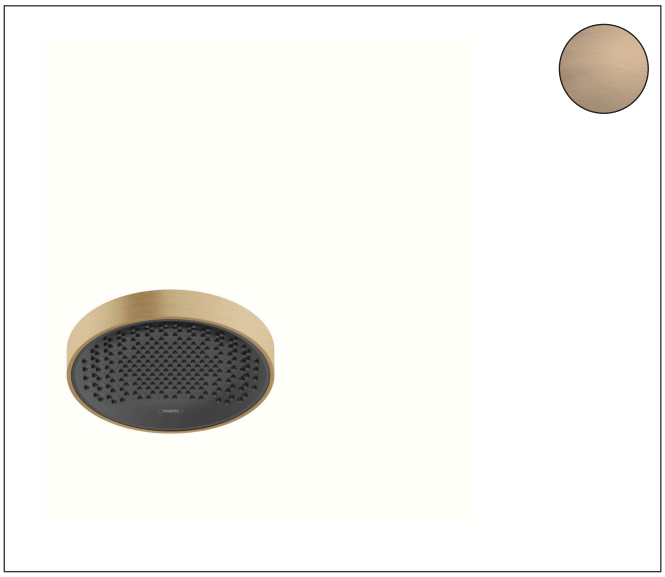

Drawing

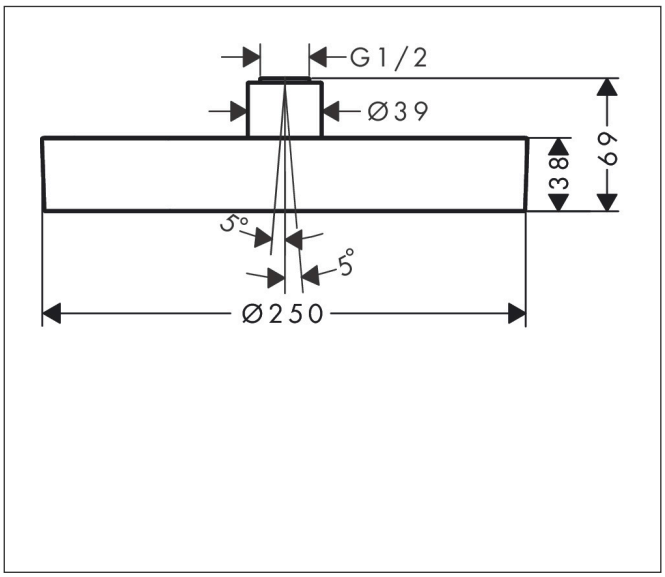

Features

- shower head size: 250 mm
- spray type: PowderRain
- FlexPower: nozzles automatically adjust to water pressure by opening and closing
- QuickClean+: reduce limescale deposits thanks to the elasticity of the nozzles
- flow rate PowderRain spray at 3 bar: 7,9 l/min
- function from: 6,5 l/min
- maximum flow rate at 3 bar: 7,9 l/min
- minimum flow pressure: 1 bar
- overhead shower angle (2 x 5°) adjustable
- frame: metal
- material spray disc: aluminium
- spray disc surface: graphite
- overhead shower removable for cleaning
- installation: ceiling or wall, Tool-free assembly and disassembly
- connection thread: G ½
- connection dimension: DN15
- suitable for continous flow water heaters
- EU taxonomy: max. 8 l/min - Do No Significant Harm (DNSH)

Technology

Quick Clean+ | Flex Power | XXL Performance | EcoSmart

Spray Types

Powder Rain

Brand	hansgrohe
Art. Name	**Rainfinity** Overhead shower 250 1jet EcoSmart
Art. Nr.	26229140
Surface	Brushed Bronze

Required parts (choose one)

Product picture	Art. Name	Art. Nr.
	hansgrohe Shower arm E 39 cm with rectangular shaft	27694140
	hansgrohe Ceiling connector S 30 cm	27389140
	hansgrohe Ceiling connector S 10 cm	27393140

Brand	hansgrohe
Art. Name	**Rainfinity** Overhead shower 250 1jet EcoSmart
Art. Nr.	26229140
Surface	Brushed Bronze

Flow chart

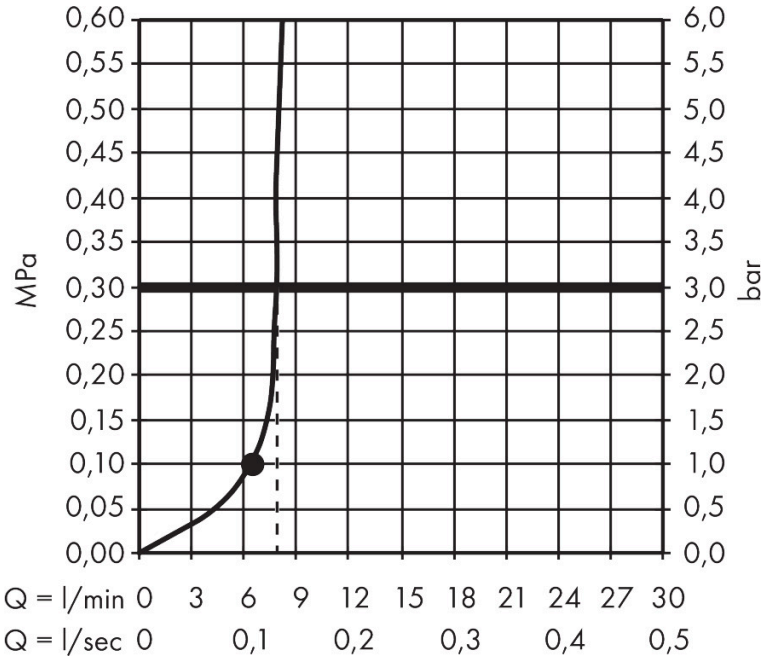

Brand	hansgrohe
Art. Name	**Rainfinity** Overhead shower 250 1jet EcoSmart
Art. Nr.	26229140
Surface	Brushed Bronze

Spare Parts Drawing for build year: > 01/21

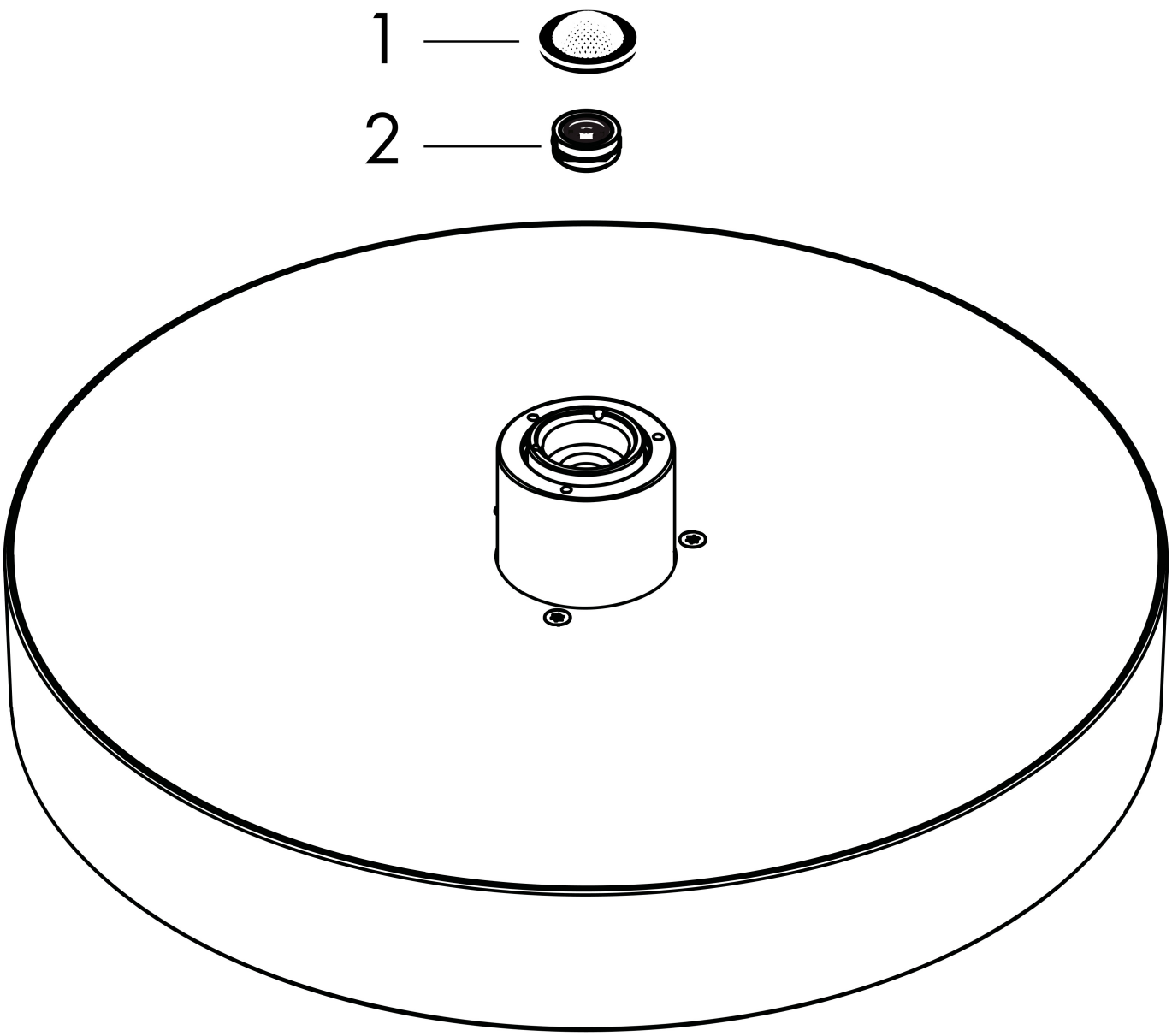

Brand	hansgrohe
Art. Name	**Rainfinity** Overhead shower 250 1jet EcoSmart
Art. Nr.	26229140
Surface	Brushed Bronze

Spare parts list for build year: > 01/21

Pos.	Description	Articlenumber
1	filter packing	93774000
2	flow limiter (9 l/min)	95659000