Brand	hansgrohe
Art. Name	**Croma** Overhead shower 280 1jet EcoSmart
Art. Nr.	26221700
Surface	Matt White

Product picture



Drawing

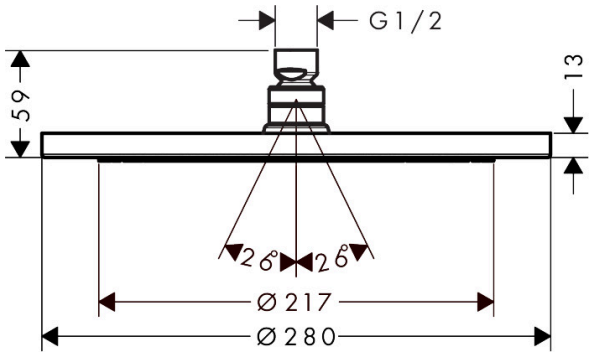

Features

- shower head size: 280 mm
- spray type: RainAir
- QuickClean: limescale deposits can simply be rubbed off with your finger
- flow rate RainAir spray at 3 bar: 8,5 l/min
- function from: 7,8 l/min
- maximum flow rate at 3 bar: 8,5 l/min
- minimum flow pressure: 2 bar
- overhead shower angle adjustable
- material spray disc: metal
- spray disc removable for cleaning
- installation: ceiling or wall
- connection thread: G ½
- connection dimension: DN15
- suitable for continous flow water heaters

Technology

XXL Performance · EcoSmart · AirPower · Quick Clean

Spray Types

Rain Air

Brand	hansgrohe
Art. Name	**Croma** Overhead shower 280 1jet EcoSmart
Art. Nr.	26221700
Surface	Matt White

Required parts (choose one)

Product picture	Art. Name	Art. Nr.
	hansgrohe Shower arm 38.9 cm	27413700
	hansgrohe Ceiling connector S 10 cm	27393700
	hansgrohe Ceiling connector S 30 cm	27389700

Brand	hansgrohe
Art. Name	**Croma** Overhead shower 280 1jet EcoSmart
Art. Nr.	26221700
Surface	Matt White

Flow chart

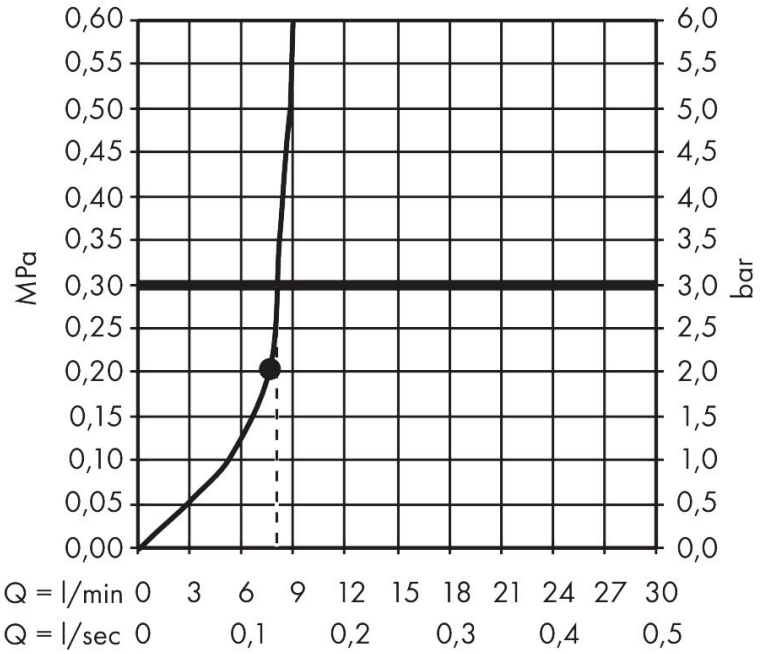

The consumption was measured in combination with the appropriate fittings (thermostat/mixer/in-wall valve) to reflect actual application in practice.

Brand	hansgrohe
Art. Name	**Croma** Overhead shower 280 1jet EcoSmart
Art. Nr.	26221700
Surface	Matt White

Spare Parts Drawing for build year: > 06/20

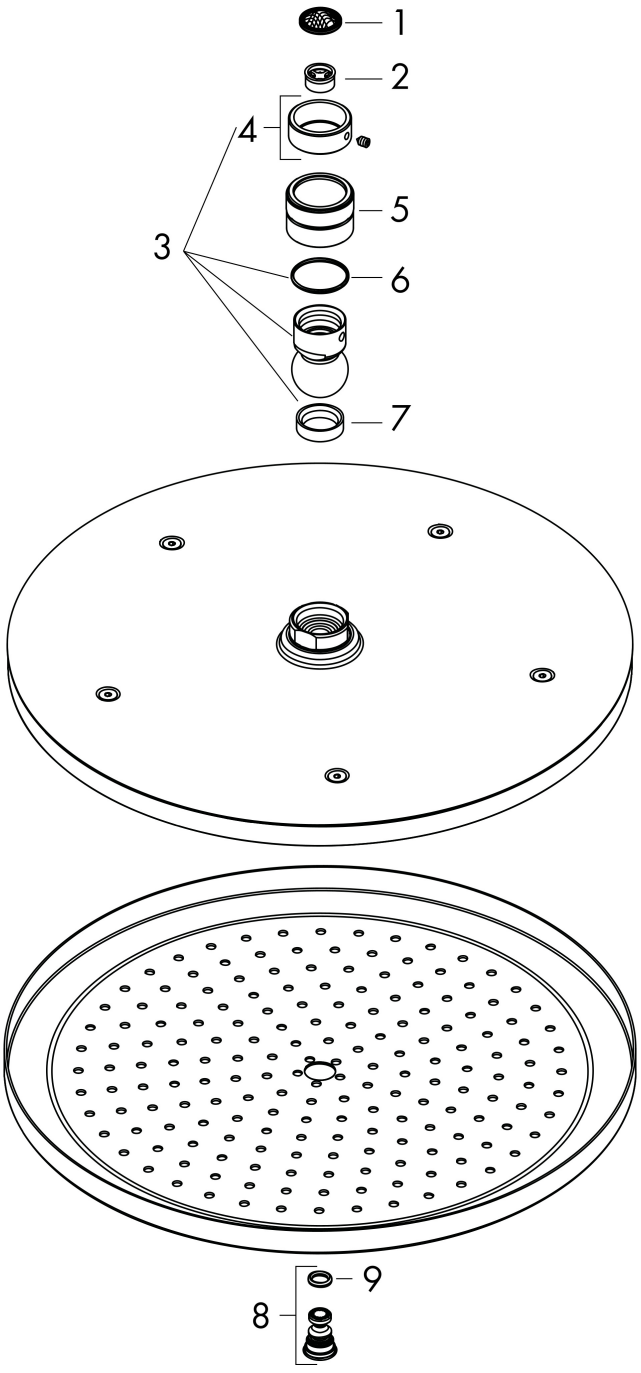

Brand	hansgrohe
Art. Name	**Croma** Overhead shower 280 1jet EcoSmart
Art. Nr.	26221700
Surface	Matt White

Spare parts list for build year: > 06/20

Pos.	Description	Articlenumber
1	filter packing	94246000
2	flow limiter (9 l/min)	95659000
3	ball joint	98941700
4	lock washer	98942000
5	nut	97958700
6	lever collar	97536000
7	seal	97606000
8	air jet (Eco)	95795700
9	O-ring 7x2	98419000