Brand	hansgrohe
Art. Name	**ShowerSelect** Valve for concealed installation for 3 functions
Art. Nr.	15764670
Surface	Matt Black

reddot winner 2021

Product picture



Drawing

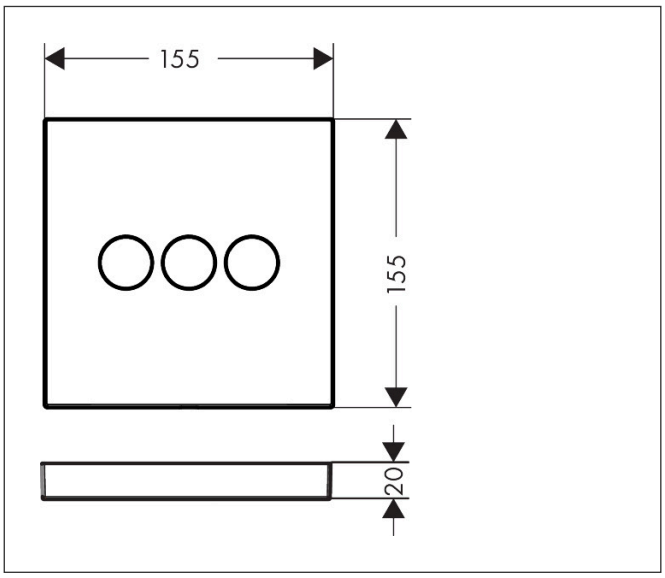

Features

- 3 functions
- simultaneous use of several outlets
- Start/stop valve to operate the functions
- connection type: basic set
- flow rate upper outlet: 26 l/min
- flow rate left and right: 29 l/min
- maximum flow rate at 3 bar: 30 l/min
- valve is delivered with buttons Rain large, Rain small and hand shower

Brand	hansgrohe
Art. Name	**ShowerSelect** Valve for concealed installation for 3 functions
Art. Nr.	15764670
Surface	Matt Black

Flow chart

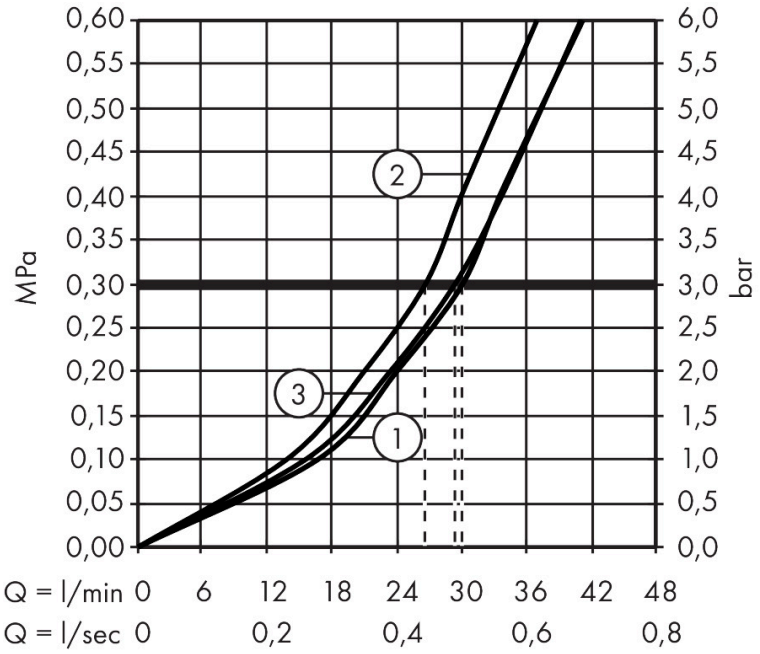

1 Outlet 1
2 Outlet 2
3 Outlet 3

Brand	hansgrohe
Art. Name	**ShowerSelect** Valve for concealed installation for 3 functions
Art. Nr.	15764670
Surface	Matt Black

reddot winner 2021

Installation examples

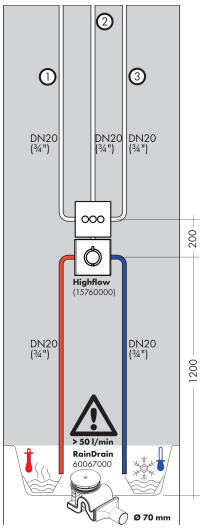

Dimensions may vary due to ceramic tolerances related to the production process.

Brand	hansgrohe
Art. Name	**ShowerSelect** Valve for concealed installation for 3 functions
Art. Nr.	15764670
Surface	Matt Black

Spare Parts Drawing for build year: 10/21 - 12/25

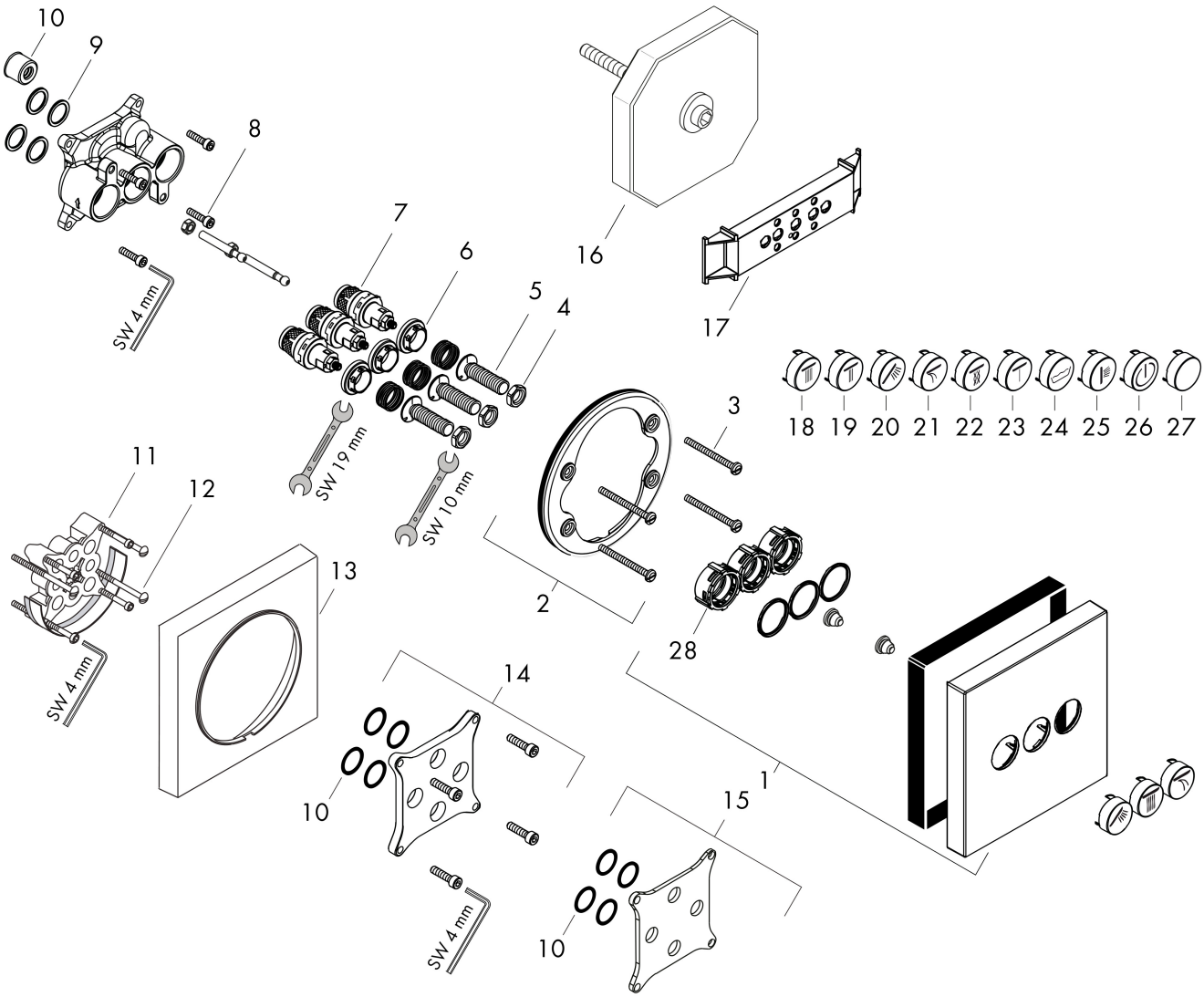

Brand	hansgrohe
Art. Name	**ShowerSelect** Valve for concealed installation for 3 functions
Art. Nr.	15764670
Surface	Matt Black

Spare parts list for build year: 10/21 - 12/25

Pos.	Description	Articlenumber
1	escutcheon 155 / 155 mm	92227670
2	holder for escutcheon	98793000
3	set of fixing screws	96454000
4	nut and flange	92696000
5	Select-adapter	92219000
6	nut	98368000
7	shut off unit	95758000
8	set of screws	96525000
9	O-ring 16x2	98133000
10	noise reduction	94073000
11	extension 25 mm	13595000
12	set of fixing screws	97747000
13	extension 22 mm	13593670
14	extension 10 mm for iBox universal with shut-off unit	92332000
15	compensation set 1°	95521000
16	flushing unit complete	15956000
17	fit-up aid	92540000
18	symbol head shower Rain large	93571670
19	symbol head shower Rain small	93572670
20	symbol handshower	93573670
21	symbol Flood jet	93574670
22	symbol Whirl	93575670
23	symbol Mono	93576670
24	symbol tub	93577670
25	symbol body shower	93578670
26	symbol ON/OFF	93579670
27	pushbutton	93955670
a	concealed item	01800180
b	shut off unit (special)	92361000
c	Grease	90920000