Brand	hansgrohe
Art. Name	**ShowerSelect** Valve for concealed installation for 3 functions
Art. Nr.	15764340
Surface	Brushed Black Chrome

reddot winner 2021

Product picture



Drawing

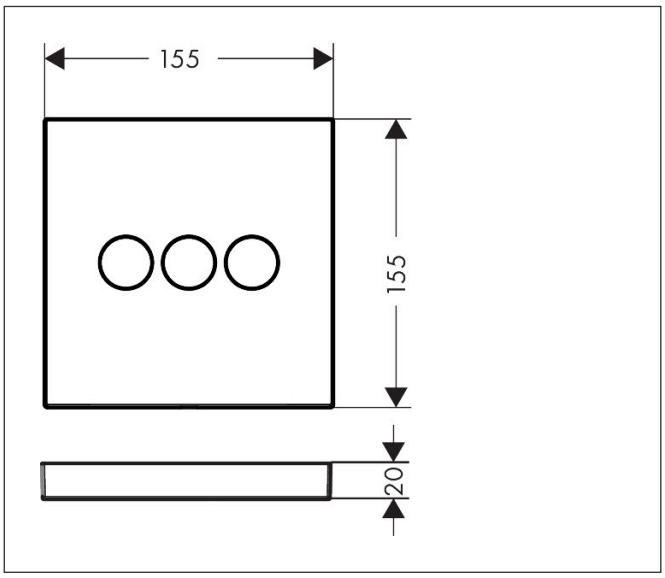

Features

- 3 functions
- simultaneous use of several outlets
- Start/stop valve to operate the functions
- connection type: basic set
- flow rate upper outlet: 26 l/min
- flow rate left and right: 29 l/min
- maximum flow rate at 3 bar: 30 l/min
- valve is delivered with buttons Rain large, Rain small and hand shower

Brand	hansgrohe
Art. Name	**ShowerSelect** Valve for concealed installation for 3 functions
Art. Nr.	15764340
Surface	Brushed Black Chrome

Flow chart

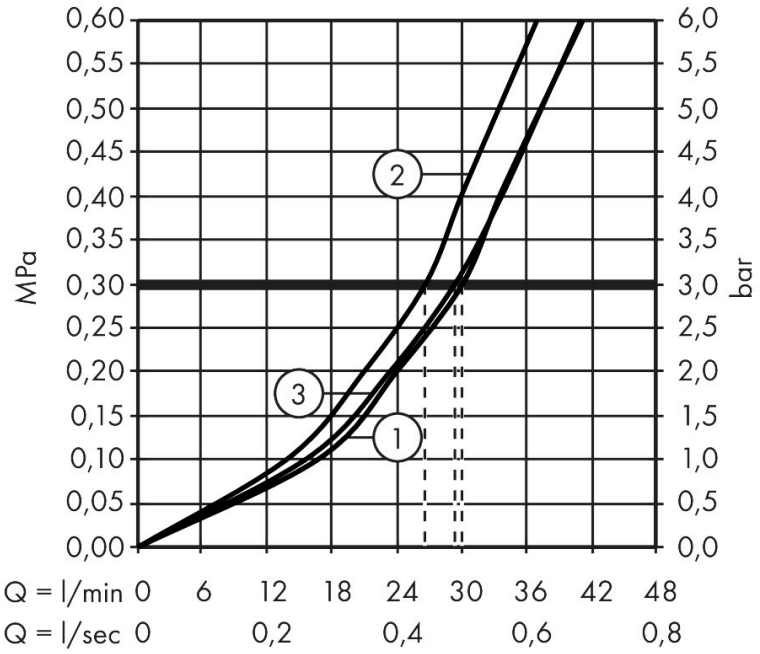

1 Outlet 1
2 Outlet 2
3 Outlet 3

Brand	hansgrohe
Art. Name	**ShowerSelect** Valve for concealed installation for 3 functions
Art. Nr.	15764340
Surface	Brushed Black Chrome

reddot winner 2021

Installation examples

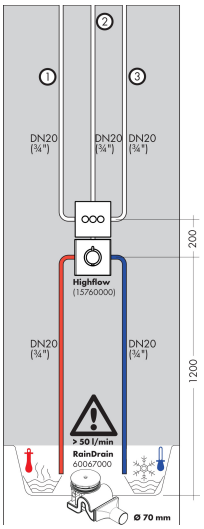

Dimensions may vary due to ceramic tolerances related to the production process.

Brand	hansgrohe
Art. Name	**ShowerSelect** Valve for concealed installation for 3 functions
Art. Nr.	15764340
Surface	Brushed Black Chrome

Spare Parts Drawing for build year: 10/21 - 12/25

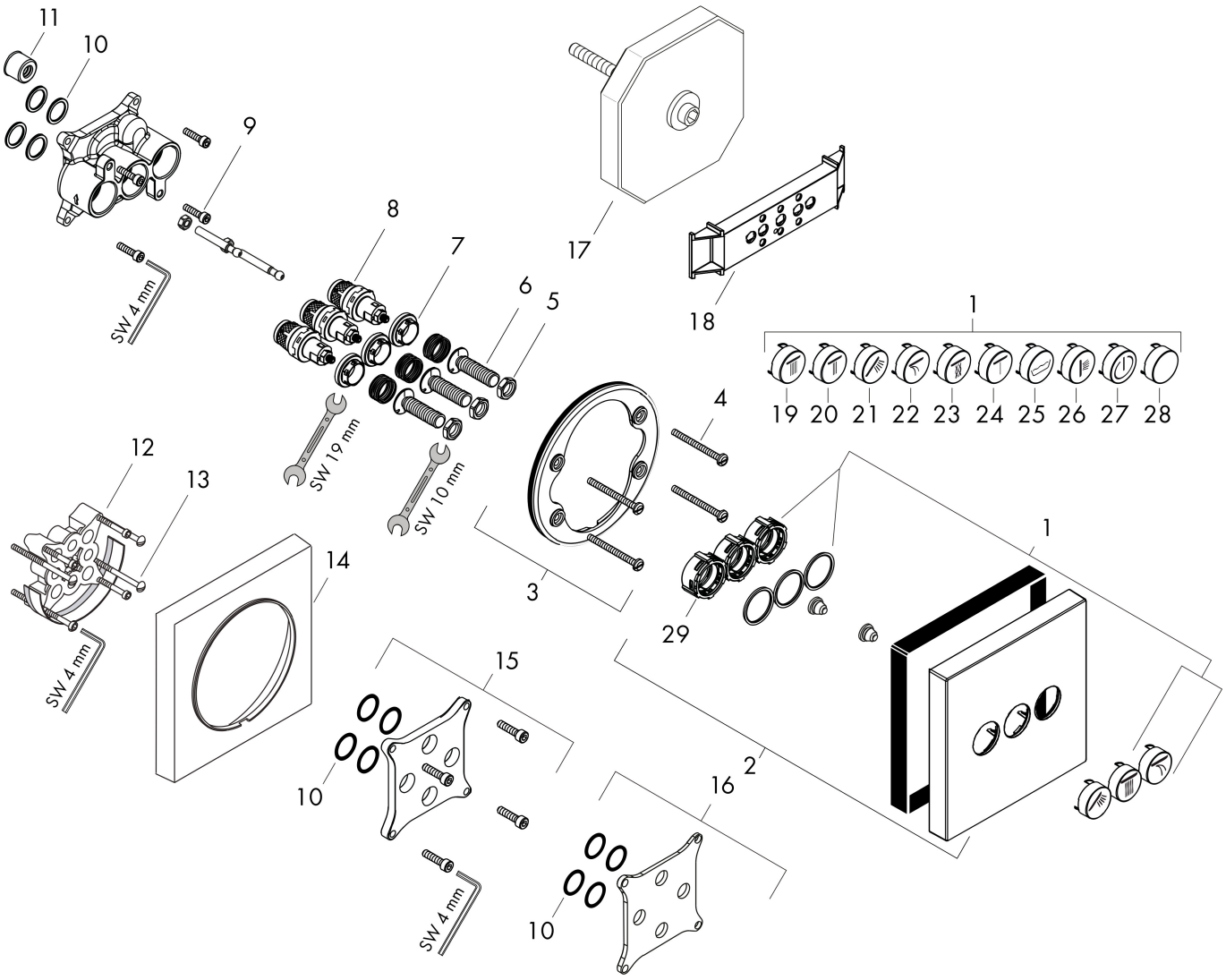

Brand	hansgrohe
Art. Name	**ShowerSelect** Valve for concealed installation for 3 functions
Art. Nr.	15764340
Surface	Brushed Black Chrome

Spare parts list for build year: 10/21 - 12/25

Pos.	Description	Articlenumber
1	set of symbols	92218000
2	escutcheon 155 / 155 mm	92227340
3	holder for escutcheon	98793000
4	set of fixing screws	96454000
5	nut and flange	92696000
6	Select-adapter	92219000
7	nut	98368000
8	shut off unit	95758000
9	set of screws	96525000
10	O-ring 16x2	98133000
11	noise reduction	94073000
12	extension 25 mm	13595000
13	set of fixing screws	97747000
14	extension 22 mm	13593340
15	extension 10 mm for iBox universal with shut-off unit	92332000
16	compensation set 1°	95521000
17	flushing unit complete	15956000
18	fit-up aid	92540000
19	symbol head shower Rain large	93571880
20	symbol head shower Rain small	93572880
21	symbol handshower	93573880
22	symbol Flood jet	93574880
23	symbol Whirl	93575880
24	symbol Mono	93576880
25	symbol tub	93577880
26	symbol body shower	93578880
27	symbol ON/OFF	93579880
28	pushbutton	93955880
29	Select-adapter	94806000
a	concealed item	01800180

Brand	hansgrohe
Art. Name	**ShowerSelect** Valve for concealed installation for 3 functions
Art. Nr.	15764340
Surface	Brushed Black Chrome

Spare parts list for build year: 10/21 - 12/25

Pos.	Description	Articlenumber
b	shut off unit (special)	92361000
c	Grease	90920000