Brand	hansgrohe
Art. Name	**Ecostat Square** Thermostat for concealed installation for 2 functions
Art. Nr.	15714340
Surface	Brushed Black Chrome

Product picture



Drawing

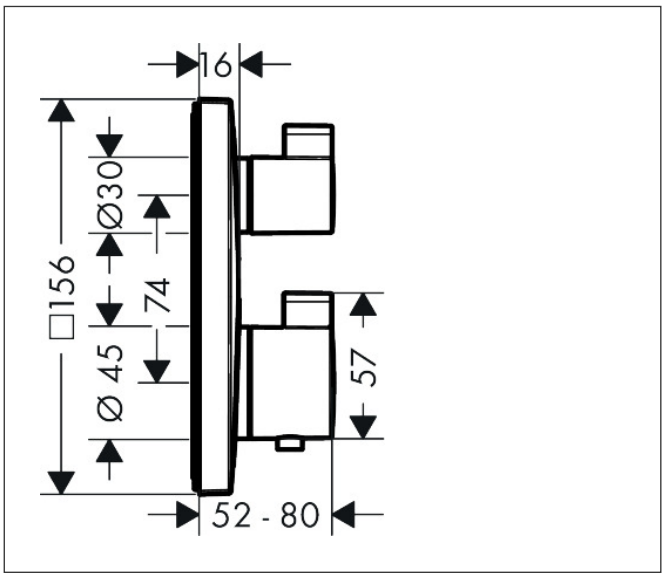

Features

- 2 functions
- volume control and diverter for 2 functions
- cartridge: T30, AuV 32
- maximum flow rate at 1 bar: 16 l/min
- maximum flow rate at 3 bar: 29 l/min
- flow rate upper outlet: 28 l/min
- flow rate lower outlet: 25 l/min
- min. operating pressure: 1 bar
- max. operating pressure: 10 bar
- volume control
- safety stop at 40 °C
- temperature limitation adjustable
- non-return valve
- connection type: basic set
- noise class: I
- flow rate class: B
- ECAU: U3

Technology



Brand	hansgrohe
Art. Name	**Ecostat Square** Thermostat for concealed installation for 2 functions
Art. Nr.	15714340
Surface	Brushed Black Chrome

Flow chart

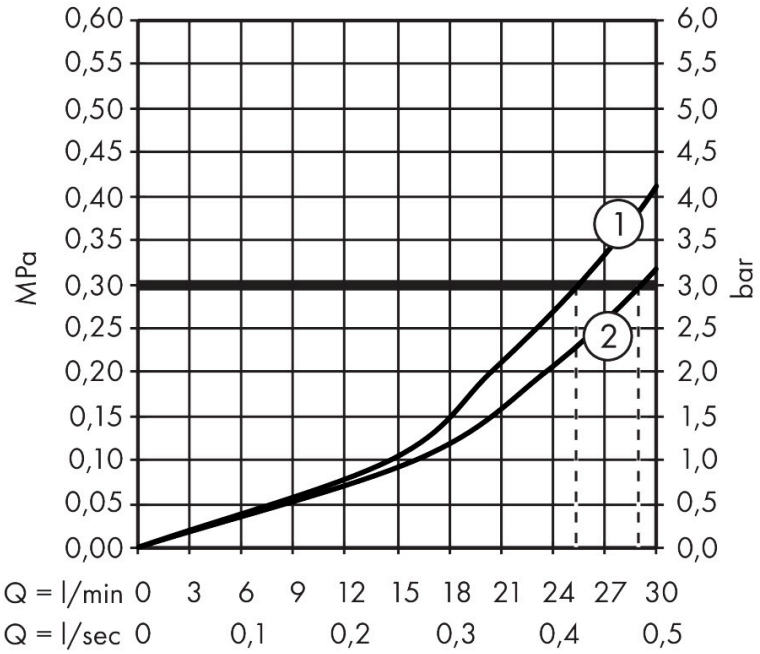

1 Shower outlet
2 Tub outlet

Brand	hansgrohe
Art. Name	**Ecostat Square** Thermostat for concealed installation for 2 functions
Art. Nr.	15714340
Surface	Brushed Black Chrome

Spare Parts Drawing for build year: 11/19 - 12/25

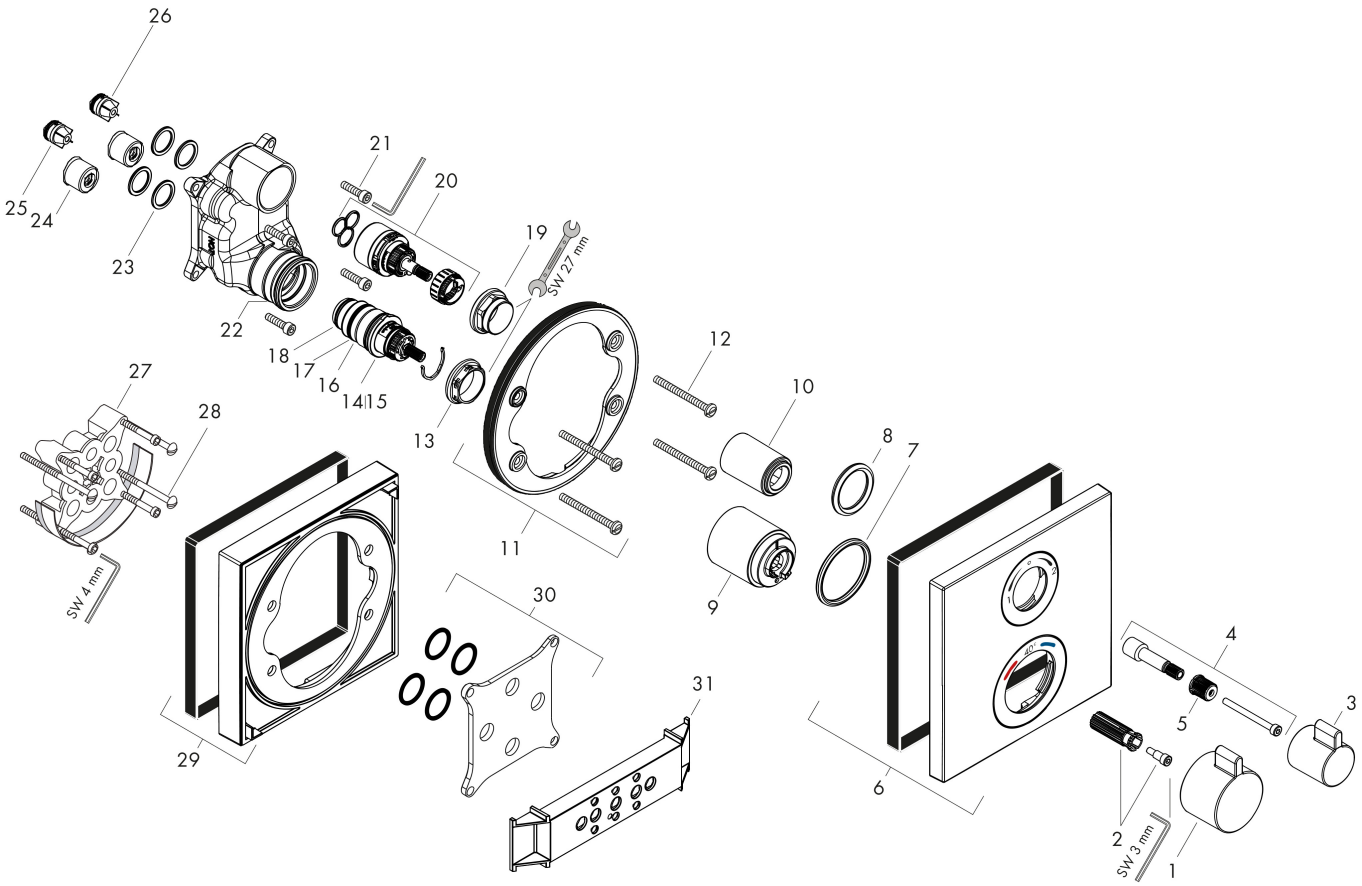

Brand	hansgrohe
Art. Name	**Ecostat Square** Thermostat for concealed installation for 2 functions
Art. Nr.	15714340
Surface	Brushed Black Chrome

Spare parts list for build year: 11/19 - 12/25

Pos.	Description	Articlenumber
1	handle for thermostat	92215340
2	handle fixing set	95843000
3	handle	92281340
4	adapter for handle	95252000
5	handle fixing set	98932000
6	escutcheon 155 / 155 mm	93241340
7	O-ring 44x4	98471000
8	O-ring 30x5	98153000
9	sleeve	92216340
10	sleeve	95253340
11	holder for escutcheon	98793000
12	set of fixing screws	96454000
13	nut	98913000
14	thermostat cartridge	98282000
15	cartridge for exchanged connections	92373000
16	O-ring 25x2,5	92146000
17	O-ring 25x1,5	98146000
18	O-ring 20x1,5	98197000
19	nut	93605000
20	shut off unit with selector	98283000
21	O-ring 36x2	98156000
22	set of screws	96525000
23	O-ring 16x2	98133000
24	noise reduction	94073000
25	set of non return valves DW 15	97350000
26	non return valve (pressure-resistant up to 2 MPa)	92594000
27	extension 25 mm	13595000
28	set of fixing screws	97747000
29	extension 22 mm	13593340
30	compensation set 1°	95521000

Brand	hansgrohe
Art. Name	**Ecostat Square** Thermostat for concealed installation for 2 functions
Art. Nr.	15714340
Surface	Brushed Black Chrome

Spare parts list for build year: 11/19 - 12/25

Pos.	Description	Articlenumber
31	fit-up aid	92540000
a	concealed item	01800180